# City Of Woodland
# Council Agenda Summary Sheet

| | |
|---|---|
| **Agenda Item:** Approval of contract with Lakeside Industries, Inc. for the East Scott Avenue Overlay Project | **Agenda Item #:** Action (D ) |
| | **For Agenda of:** June 17, 2013 |
| | **Department:** Public Works |
| | **Date Submitted:** June 11, 2013 |

| | |
|---|---|
| **Cost of Item:** | $160,810 |
| **Amount Budgeted:** | $250,000 |
| **Unexpended Balance:** | $250,000 |

**BARS #:** 104 000 000 542 30 48 00

**Description:** Repairs/Maintenance - Projects

**Department Supervisor Approval:** *Public Works Department /s/* Bart Stipp

**Agenda Item Supporting Narrative** (list attachments, supporting documents)**:**

1) East Scott Overlay Bid Tab
2) East Scott Overlay Bid Summary
3) Lakeside Industries Bid Proposal and Contractor Checklist
4) East Scott Overlay Bid Documents
5) East Scott Overlay Addendum #1

**Summary Statement:**

Background:

In 2012 the City received a $250,000 grant from the Transportation Improvement Board for an overlay of East Scott Avenue. The grant match for the City will come out of the 2013 approved street budget plus in-kind services for design and construction management of this project. The project consists of grinding the top 3" of pavement on East Scott Avenue and replacing it with 3" of new asphalt. The project also includes installing new ADA sidewalk ramps at 6 locations along East Scott Avenue. Bids for the project were opened on June 11, 2013.

The City received three bids for the project. The lowest bidder was Lakeside Industries, Inc. at $160,810.00. They are a qualified contractor and have done numerous projects in and around Woodland.

Staff Summary and Recommendation

Staff recommends that City Council award the East Scott Overlay Project to Lakeside Industries, Inc. in the amount of $160,810.

# East Scott Overlay

**City of Woodland, WA**
**Bid Tabs**
**June 11, 2013**

| Item Number | Std Spec | Quantity | Unit | Description | Engineer's Estimate Unit Price | Engineer's Estimate Total | Granite Construction Unit Price | Granite Construction Total | Lakeside Industries Unit Price | Lakeside Industries Total | Brix Paving Unit Price | Brix Paving Total |
|---|---|---|---|---|---|---|---|---|---|---|---|---|
| 1 | 1-07 | 1 | LS | SPCC Plan | $ 1,100.00 | $ 1,100 | $ 250.00 | $ 250 | $ 328.00 | $ 328 | $ 292.17 | 292.17 |
| 2 | 1-09 | 1 | LS | Mobilization | $ 12,100.00 | $ 12,100 | $ 20,283.00 | $ 20,283 | $ 9,800.00 | $ 9,800 | $ 3,545.21 | 3,545.21 |
| 3 | 1-10 | 1 | LS | Traffic Control Supervisor | $ 2,750.00 | $ 2,750 | $ 5,000.00 | $ 5,000 | $ 3,340.00 | $ 3,340 | $ 1,837.17 | 1,837.17 |
| 4 | 1-10 | 1 | LS | Temporary Traffic Control | $ 1,875.00 | $ 1,875 | $ 1,500.00 | $ 1,500 | $ 1,750.00 | $ 1,750 | $ 1,837.17 | 1,837.17 |
| 5 | 1-10 | 120 | HR | Flaggers and Spotters | $ 55.00 | $ 6,600 | $ 60.00 | $ 7,200 | $ 50.00 | $ 6,000 | $ 59.63 | 7,155.60 |
| 6 | 2-01 | 1 | LS | Roadside Cleanup | $ 2,200.00 | $ 2,200 | $ 500.00 | $ 500 | $ 1,700.00 | $ 1,700 | $ 467.47 | 467.47 |
| 7 | 5-04 | 1,375 | TN | HMA Cl. 1/2" PG 64-22 (3" Overlay) | $ 110.00 | $ 151,250 | $ 104.00 | $ 143,000 | $ 71.00 | $ 97,625 | $ 81.00 | 111,375.00 |
| 8 | 5-04 | 8,000 | SY | Planing Bituminous Pavement | $ 7.70 | $ 61,600 | $ 3.00 | $ 24,000 | $ 2.35 | $ 18,800 | $ 3.72 | **29,760.00** |
| 9 | 5-04 | 1 | LS | Material Testing | $ 2,700.00 | $ 2,700 | $ 1,000.00 | $ 1,000 | $ 1,080.00 | $ 1,080 | $ 899.89 | 899.89 |
| 10 | 6-02 | 3 | EA | Replace Existing Sidewalk or ramp with new Concrete Sidewalk ADA Ramp | $ 3,000.00 | $ 9,000 | $ 5,000.00 | $ 15,000 | $ 3,120.00 | $ 9,360 | $ 4,818.46 | 14,455.38 |
| 11 | 6-02 | 3 | EA | Remove existing sidewalk ramp with sidewalk and place new Concrete ADA ramp in new location. | $ 3,300.00 | $ 9,900 | $ 5,000.00 | $ 15,000 | $ 3,440.00 | $ 10,320 | $ 4,947.02 | 14,841.06 |
| 12 | 8-01 | 1 | LS | Erosion Control | $ 1,100.00 | $ 1,100 | $ 500.00 | $ 500 | $ 710.00 | $ 710 | $ 409.04 | 409.04 |
| | | | | **Base Bid Total** | | $ 262,175 | | **233,233.00** | | **160,813.00** | | **186,875.16** |

# BID SUMMARY

OWNER: City of Woodland

PROJECT: HMA Overlay - East Scott Avenue

PROJECT NO.: CAP-13-005

DATE OF BID OPENING: June 11, 2013

RECORDER: Tonya Ingle/Bart Stepp

| # | BIDDER | Acknowledge Addenda | Bid Proposal Form | Bid Bond | Bidder Qualifications | Emp Sec Dept Cert of Coverage | BID AMOUNTS IN PROPOSAL | CHECKED BID AMOUNTS |
|---|---|---|---|---|---|---|---|---|
| 1 | Brix Paving Company | yes | yes | yes | yes | yes | $183,275 | $186,875 |
| 2 | Granite Construction Company | yes | yes | yes | yes | yes | $233,233 | $233,233 |
| 3 | Lakeside Industries, Inc. | yes | yes | yes | yes | yes | $160,810 | $160,810 |

## BID PROPOSAL FORM

TO: City of Woodland
PO Box 9
230 Davidson Ave.
Woodland, Washington 98674

FROM: Bidder LAKESIDE INDUSTRIES
Address 500 TENNANT WAY PO BOX 576
LONGVIEW, WA 98632
Telephone 360.423.6882

The undersigned, as bidder, declares that we have examined all the contract documents and that we will contract with the City of Woodland to do everything necessary to complete the work as outlined on the plans and specifications for the 2013 HMA Overly - East Scott Avenue.

We acknowledge that addenda numbers 1 to 1 have been delivered to us and have been examined as part of the contract documents. We agree that the Qualification of Bidder shall form a part of this proposal.

If our BID is accepted, we agree to sign the contract form and to furnish the contract bond and the required evidences of insurance within ten (10) calendar days after receiving written notice of the award of contract.

We further agree, if our BID is accepted and a contract for performance of work is entered into with the City of Woodland, to so plan the work and to prosecute it with such diligence that all of the work shall be completed within the time period stated in the contract. We understand that the City of Woodland reserves the right to reject any or all bids and to determine which proposal is, in the judgment of the City of Woodland, the lowest responsible bid, and which proposal, if any, should be accepted in the best interests of the City of Woodland and that the City of Woodland also reserves the right to waive any informalities in any proposal or bid.

We further state that we have not, either directly or indirectly, entered into any agreement, participated in any collusion, or otherwise taken any action in restraint of free competitive bidding in connection with such contract.

Bidder agrees that the work will be completed within thirty (30) working days after the date when the notice to proceed is received from the City of Woodland.

We propose to perform the work at the prices listed in the following bid schedule(s):

Notes:
(1) See Special Provisions and the Standard Specifications for State sales tax requirements.
(2) The City reserves the right to adjust the scope of this work to match available funds.
(3) The City reserves the right to reject any or all bids.

(4) The table below provides a list of items required to complete the project. It is the contractor's responsibility to complete the project scope to all required standards and specifications.
(5) The City reserves the right to include the Alternative Bid Item as part of the total bid price.

**2013 HMA OVERLAY - EAST SCOTT AVENUE PROJECT BID PROPOSAL:**

| Item No. | Std. Spec. | Description | Estimated Quantity | Units | Unit Price | Total Price |
|---|---|---|---|---|---|---|
| 1. | 1-07 | Spill Prevention, Control and Countermeasure Plan | 1 | LS | $325.00 | $325.00 |
| 2. | 1-09 | Mobilization | 1 | LS | $9800.00 | $9800.00 |
| 3. | 1-10 | Traffic Control Supervisor | 1 | LS | $3,340.00 | $3,340.00 |
| 4. | 1-10 | Temporary Traffic Control | 1 | LS | $1,750.00 | $1,750.00 |
| 5. | 1-10 | Flaggers and Spotters | 120 | HR | $50.00 | $6,000.00 |
| 6. | 2-01 | Roadside Cleanup | 1 | LS | $1,700.00 | $1,700.00 |
| 7. | 5-04 | HMA Cl. ½" PG 64-22 (3" Overlay) | 1375 | TN | $71.00 | $97,625.00 |
| 8. | 5-04 | Planing Bituminous Pavement | 8000 | SY | $2.35 | $18,800.00 |
| 9. | 5-04 | Material Testing | 1 | LS | $1,080.00 | $1,080.00 |
| 10. | 6-02 | Replace existing sidewalk or ramp with new Concrete Sidewalk ADA Ramp | 3 | EA | $3,120.00 | $9,360.00 |
| 11. | 6-02 | Remove existing sidewalk ramp with sidewalk and place new Concrete ADA ramp in new location | 3 | EA | $3440.00 | $10,320.00 |
| 12. | 8-01 | Erosion Control | 1 | LS | $710.00 | $710.00 |
| | | **Grand Total HMA Overlay - East Scott Avenue** | | | $ 160,810.00 | |

BIDDER acknowledges receipt of the following ADDENDUM:

| Addendum No. | Addendum Receipt Date | Signed Acknowledgment |
|---|---|---|
| 1 | 5/31/12 | |

WASHINGTON STATE AND LOCAL SALES TAX. Sales Tax (7.7%) shall be included in the unit bid prices for the material and supplies used for the project.

BIDDER'S ADDRESS. Notice of Acceptance of this bid or requests for additional information should be addressed to the undersigned at the address stated below.

NON-COLLUSION DECLARATION. I, by signing the proposal, hereby declare, under penalty of perjury under the laws of the United States that the following statements are true and correct:

1. That the undersigned person(s), firm, association or corporation has (have) not, either directly or indirectly, entered into any agreement, participated in any collusion, or otherwise taken any action in restraint of free competitive bidding in connection with the project or which this proposal is submitted.

2. That by signing the signature page of this proposal, I am deemed to have signed and have agreed to the provisions of this declaration.

NOTES:

1. This proposal form is not transferable and any alteration of the firm's name entered hereon without prior permission from the Public Works Director will be cause for considering the proposal irregular and subsequent rejection of the bid.

SIGNATURE

Date: 6/11/13

LAKESIDE INDUSTRIES INCORPORATED
Proper Name of Bidder

Contractor's License No.: LAKESI*271JD

By: LAKESIDE INDUSTRIES INC
Company Name

PO BOX 576
Address

LONGVIEW WA 98632
City State Zip

# BID BOND

**KNOW ALL MEN BY THESE PRESENTS,** that we, the undersigned, _____ Lakeside Industries, Inc. as Principal, and Travelers Casualty and Surety Company of America as Surety, are hereby held and firmly bound unto City of Woodland as Owner, in the penal sum of: Five Percent (5%) of the total amount bid --- for the payment of which, well and truly to be made, we hereby jointly and severally bind ourselves, successors and assigns.

**SIGNED,** this 11th day of June, 2013.

The condition of the above obligation is such that whereas the Principal has submitted to: City of Woodland a certain Bid attached hereto and hereby made a part hereof to enter into a contract in writing, for the 2013 HMA Overlay - East Scott Avenue.

**NOW, THEREFORE,**

a) If said Bid shall be rejected, or

b) If said Bid shall be accepted and the Principal shall execute and deliver a contract in the form of contract attached hereto (properly completed in accordance with said Bid) and shall furnish a bond for his faithful performance of said contract, and for the payment of all persons performing labor or furnishing materials in connection therewith, and shall in all other respects perform the agreement created by the acceptance of said Bid, then this obligation shall be void, otherwise the same shall remain in force and effect; it being expressly understood and agreed that the liability of the Surety for any and all claims hereunder shall, in no event, exceed the penal amount of this obligation as herein stated.

The Surety, for value received, hereby stipulates and agrees that the obligations of said Surety and its bond shall be in no way impaired or affected by an extension of the time within which the Owner may accept such Bid; and said Surety does hereby waive notice of any such extension.

**IN WITNESS WHEREOF**, the Principal and the Surety have hereunto set their hands and seals, and such of them as are corporations have caused their corporate seals to be hereto affixed and these presents to be signed by their proper officers, the day and year first set forth above.

Lakeside Industries, Inc.

JEFF HERRIFORD - ESTIMATOR (L.S.)

**Principal** **Title**

Travelers Casualty and Surety Company of America

**Surety**

**By:** Susan B Larson

Susan B. Larson, Attorney-in-Fact

**IMPORTANT:** Surety Companies executing bonds must appear on the Treasury Department's most current list (Circular 570 as amended) and be authorized to transact business in the state where the project is located.

WARNING: THIS POWER OF ATTORNEY IS INVALID WITHOUT THE RED BORDER

TRAVELERS

# POWER OF ATTORNEY

**Farmington Casualty Company**
**Fidelity and Guaranty Insurance Company**
**Fidelity and Guaranty Insurance Underwriters, Inc.**
**St. Paul Fire and Marine Insurance Company**
**St. Paul Guardian Insurance Company**
**St. Paul Mercury Insurance Company**
**Travelers Casualty and Surety Company**
**Travelers Casualty and Surety Company of America**
**United States Fidelity and Guaranty Company**

**Attorney-In Fact No.** 226532 **Certificate No.** 005462949

**KNOW ALL MEN BY THESE PRESENTS**: That Farmington Casualty Company, St. Paul Fire and Marine Insurance Company, St. Paul Guardian Insurance Company, St. Paul Mercury Insurance Company, Travelers Casualty and Surety Company, Travelers Casualty and Surety Company of America, and United States Fidelity and Guaranty Company are corporations duly organized under the laws of the State of Connecticut, that Fidelity and Guaranty Insurance Company is a corporation duly organized under the laws of the State of Iowa, and that Fidelity and Guaranty Insurance Underwriters, Inc., is a corporation duly organized under the laws of the State of Wisconsin (herein collectively called the "Companies"), and that the Companies do hereby make, constitute and appoint

Deanna M. Meyer, Karen P. Dever, Jill A. Boyle, Stuart A. O'Farrell, Susan B. Larson, Scott Fisher, Elizabeth R. Hahn, Jana M. Roy, Scott McGilvray, Mindee Rankin, and Ellen Bell

of the City of Bellevue, State of Washington, their true and lawful Attorney(s)-in-Fact, each in their separate capacity if more than one is named above, to sign, execute, seal and acknowledge any and all bonds, recognizances, conditional undertakings and other writings obligatory in the nature thereof on behalf of the Companies in their business of guaranteeing the fidelity of persons, guaranteeing the performance of contracts and executing or guaranteeing bonds and undertakings required or permitted in any actions or proceedings allowed by law.

**IN WITNESS WHEREOF**, the Companies have caused this instrument to be signed and their corporate seals to be hereto affixed, this 26th day of April, 2013.

**Farmington Casualty Company**
**Fidelity and Guaranty Insurance Company**
**Fidelity and Guaranty Insurance Underwriters, Inc.**
**St. Paul Fire and Marine Insurance Company**
**St. Paul Guardian Insurance Company**
**St. Paul Mercury Insurance Company**
**Travelers Casualty and Surety Company**
**Travelers Casualty and Surety Company of America**
**United States Fidelity and Guaranty Company**

State of Connecticut
City of Hartford ss.

By: _____
Robert L. Raney, Senior Vice President

On this the 26th day of April, 2013, before me personally appeared Robert L. Raney, who acknowledged himself to be the Senior Vice President of Farmington Casualty Company, Fidelity and Guaranty Insurance Company, Fidelity and Guaranty Insurance Underwriters, Inc., St. Paul Fire and Marine Insurance Company, St. Paul Guardian Insurance Company, St. Paul Mercury Insurance Company, Travelers Casualty and Surety Company, Travelers Casualty and Surety Company of America, and United States Fidelity and Guaranty Company, and that he, as such, being authorized so to do, executed the foregoing instrument for the purposes therein contained by signing on behalf of the corporations by himself as a duly authorized officer.

**In Witness Whereof,** I hereunto set my hand and official seal.
My Commission expires the 30th day of June, 2016.

Marie C. Tetreault
Marie C. Tetreault, Notary Public

58440-8-12 Printed in U.S.A.

WARNING: THIS POWER OF ATTORNEY IS INVALID WITHOUT THE RED BORDER

## BIDDER QUALIFICATIONS

**PROJECT: 2013 HMA OVERLAY - EAST SCOTT AVENUE**

If the above contract is awarded to our company, the following persons will be authorized to sign change orders, progress payments and similar documents for the company (names and positions):

TIM SALBERG - BRANCH MANAGER

JEFF HERRIFORD - ESTIMATOR

The contractor's superintendent at the job site per Article 1-05.13 of the Standard Specifications will be (give full name): JIM NELSON - SUPERINTENDENT

The last three projects completed or substantially completed by our company involving similar construction work are as follows:

1. Project Name: 2012 CITY OVERLAYS

   Dollar amount of Contract: $ 550,000

   Owner: CITY OF KELSO

   Owner's Representative: MIKE BUSLEY Phone No.: 360.577.3379

   Contractor's Superintendent on this project: JIM NELSON

   Brief Description of Project Scope: OVERLAY CITY STREET PAVEMENT REPAIR & GRINDING

2. Project Name: 15TH AVE REHAB

   Dollar amount of Contract: $ 240,000

   Owner: CITY OF LONGVIEW

   Owner's Representative: TOM GORMAN Phone No.: 360.442.5200

   Contractor's Superintendent on this project: JIM NELSON

   Brief Description of Project Scope: REPAVE 15TH AVE IN LONGVIEW REMOVE & REPAVE 3" - PETROMAT

3. Project Name: CONTRACT 7769 - SR4 - COAL CRK TO SKAMOKAWA

Dollar amount of Contract: $5,500,000

Owner: WDOT

Owner's Representative: LEON WINGER Phone No.: 360.905.1537

Contractor's Superintendent on this project: JIM NELSON

Brief Description of Project Scope: REPAVE SR4 FROM COAL CRK TO SKAMOKAWA

Title of Person completing this form: JEFF HERRIFORD - ESTIMATOR

Signature: Date: 6/11/13

Phone No.: 360.423.6882

# Appendix D

## *FOR OWNERS*

## Mandatory Bidder Responsibility Checklist

The following checklist may be used by Owners in documenting that a Bidder meets the mandatory bidder responsibility criteria. It is suggested that Owners print a copy of documentation from the appropriate website to include with this checklist in the contract file.

| **General Information** | |
|---|---|
| Project Name: 2013 HMA OVERLAY - EAST SCOTT AVENUE | Project Number: CAP 13- |
| Bidder's Business Name: LAKESIDE INDUSTRIES | Bid Submittal Deadline: 6/11/13 |
| **Contractor Registration –** https://fortress.wa.gov/lni/bbip/ | |
| License Number: LAKESI*274JD | Status: Active: Yes ☒ No ☐ |
| Effective Date (must be effective on or before Bid Submittal Deadline): 4/4/1973 | Expiration Date: 7/31/2014 |
| **Contractor and Plumber Infraction List –** http://www.lni.wa.gov/tradeslicensing/contractors/hirecon/infractions/ | |
| Is Bidder on Infraction List? Yes ☐ No ☒ | |
| **Current UBI Number –** http://dor.wa.gov/content/doingbusiness/registermybusiness/brd/ | |
| UBI Number: 601 106 847 | Account Closed: Open ☒ Closed ☐ |
| **Industrial Insurance Coverage –** https://fortress.wa.gov/lni/crpsi/MainMenu.aspx | |
| Account Number: 700,227-00 | Account Current: Yes ☒ No ☐ |
| **Employment Security Department Number –** | |
| Employment Security Department Number: 41542200 3 | |
| • Has Bidder provided account number on the Bid Form? Yes ☒ No ☐<br>• And/or have you asked the Bidder for documentation from Employment Security Department on account number? Yes ☒ No ☐ | |
| **State Excise Tax Registration Number –** http://dor.wa.gov/content/doingbusiness/registermybusiness/brd/ | |
| Tax Registration Number: 601 106 847 | Account Closed: Open ☒ Closed ☐ |
| **Not Disqualified from Bidding –** http://www.lni.wa.gov/TradesLicensing/PrevWage/AwardingAgencies/DebarredContractors/default.asp | |
| Is the Bidder listed on the "Contractors Not Allowed to Bid" list of the Department of Labor and Industries? Yes ☐ No ☒ | |
| **Checked by:** | |
| Name of Employee: Brent Stupp | Date: 6/11/13 |

## General/Specialty Contractor

A business registered as a construction contractor with L&I to perform construction work within the scope of its specialty. A General or Specialty construction Contractor must maintain a surety bond or assignment of account and carry general liability insurance.

## Business and Licensing Information

| | | | |
|---|---|---|---|
| **Name** | LAKESIDE INDUSTRIES INC | **UBI No.** | 601106847 |
| **Phone** | 4253132600 | **Status** | Active |
| **Address** | Po Box 7016 | **License No.** | LAKESI*274JD |
| **Suite/Apt.** | | **License Type** | Construction Contractor |
| **City** | Issaquah | **Effective Date** | 4/4/1973 |
| **State** | WA | **Expiration Date** | 7/31/2014 |
| **Zip** | 980277016 | **Suspend Date** | |
| **County** | King | **Specialty 1** | General |
| **Business Type** | Corporation | **Specialty 2** | Unused |
| **Parent Company** | | | |

## Other Associated Licenses

| License | Name | Type | Specialty 1 | Specialty 2 | Effective Date | Expiration Date | Status |
|---|---|---|---|---|---|---|---|
| LAKESJV891O1 | LAKESIDE/TRI-STATE JOINT VNTR | Construction Contractor | General | Unused | 9/21/2011 | 9/21/2013 | Active |

## Business Owner Information

| Name | Role | Effective Date | Expiration Date |
|---|---|---|---|
| WHITE, JOHN C | Agent | 06/17/2008 | |
| LEE, TIMOTHY GEORGE | Chief Executive Officer | 01/01/1980 | |
| LEE, MICHAEL JAMES | President | 11/27/2007 | |
| WAGGONER, HENRY R | Secretary | 01/01/1980 | |
| WOOLSTON, DAX EDWARD | Treasurer | 04/30/2012 | |
| LEE, JEANNE M | Vice President | 01/01/1980 | 06/22/2012 |
| DARNELL, LARRY | Treasurer | 01/01/1980 | 06/17/2008 |
| LEE, R R SR | Partner | 01/01/1980 | 11/27/2007 |
| STUTGIS, ROBERT E | Partner | 01/01/1980 | 11/27/2007 |

## Bond Information

| Bond | Bond Company Name | Bond Account Number | Effective Date | Expiration Date | Cancel Date | Impaired Date | Bon |
|---|---|---|---|---|---|---|---|
| 5 | TRAVELERS CAS & SURETY CO | 105116927 | 07/01/2008 | Until Cancelled | | | $ |
| 4 | TRAVELERS CAS & SURETY CO | 103373978 | 07/31/2001 | 07/01/2008 | | | $ |

**Washington State Department of**
**Labor and Industries**

**Employer Liability Certificate**

**Department of Labor and Industries**

**Employer Liability Certificate**

Date: 06/11/2013

| | |
|---|---|
| UBI #: | 601 106 847 |
| Legal Business Name: | LAKESIDE INDUSTRIES INC |
| Account #: | 700,227-00 |
| 'Doing Business As' Name: | LAKESIDE INDUSTRIES INC |
| Estimated Workers Reported: (See Description Below) | N/A |
| Workers' Comp Premium Status: | Self-insured. Will not be liable for unpaid premiums unless they cease to be self-insured. |
| Licensed Contractor? | Yes |
| License: | LAKESI*274JD |
| Expire Date: | 7/31/2014 |
| Account Representative: | (360)902-4817 |

**What does "Estimated Workers Reported" mean?**
Estimated workers reported represents the number of full time position requiring at least 480 hours of work per calendar quarter. A single 480 hour position may be filled by one person, or several part time workers.

**Industrial Insurance Information**
Employers report and pay premiums each quarter based on hours of employee work already performed, and are liable for premiums found later to be due. Industrial insurance accounts have no policy periods, cancellation dates, limitations of coverage or waiver of subrogation (See RCW 51.12.050 and 51.16.190).

Back to search results

If "Non-revenue" appears after Tax Registration Number, the account is not registered with the Department of Revenue. However, it may be registered with other agencies in the state.

# Washington State Department of Revenue
# State Business Records Database Detail

TAX REGISTRATION NO: 601106847
UBI: 601106847
ENTITY NAME: LAKESIDE INDUSTRIES INC
BUSINESS NAME:

ACCOUNT OPENED: 06/17/2008
ACCOUNT CLOSED: OPEN

MAILING ADDRESS:
PO BOX 7016
ISSAQUAH, WA 98027-7016

BUSINESS LOCATION:
6505 226TH PL SE STE 200
ISSAQUAH, WA 98027-8905

ENTITY TYPE: CORPORATION

RESELLER PERMIT NO: A16 7343 13
PERMIT EFFECTIVE: 01/01/2012
PERMIT EXPIRES: 12/31/2013

NAICS CODE: 238990
NAICS DEFINITION: ALL OTHER SPECIALTY TRADE CONTRACTORS (PT)

FOR NON-COMMERCIAL USE ONLY

06/11/2013 3:42 PM

**Employment Security Department**
WASHINGTON STATE
P.O. Box 9046 Olympia, WA 98507-9046 | Fax 360-902-9287

June 11, 2013

LAKESIDE INDUSTRIES INC
LAKESIDE INDUSTRIES INC
PO BOX 7016
ISSAQUAH, WA 98027-7016

RE: ES Ref #: 41542200 3

This letter confirms that, as of the date shown above, you have an account and it is in good standing with the Employment Security Department of the State of Washington.

This letter may be used for purposes of documenting bidder responsibility for public works contracts.

If we may be of further assistance, please call the Registration, Inquiry, Standards and Coordination (RISC) Unit at (360) 902-9450.

EMPLOYMENT SECURITY DEPARTMENT

By

Robyn R. Wells
*Authorized Representative*

# Department of Labor and Industries
## Prevailing Wage Section
## Contractors Not Allowed to Bid on Public Works Projects

| Company Name | UBI | License | Principals | Status | RC |
|---|---|---|---|---|---|
| GENESIS CONSTRUCTION OF TRI-CI | 601962196 | | Barronelle Stuszman<br>Darold D Stutzman<br>Shane Stutzman<br>Tim Stutzman | Debarred | 51.48. |
| Glory Developers | 601715431 | GLORYDI044NA | | Debarred Until Penalties Paid | 39.12. |
| Glory Developers | 601715431 | GLORYDI044NA | | Debarred Until Penalties Paid | 39.12. |
| GO GREEN MECHANICAL & SOLAR LL | 603037349 | GOGREGM904NR | Larry Butler | Debarred | 18.27. |
| GO GREEN MECHANICAL & SOLAR LL | 603037349 | GOGREGM904NR | Larry Butler | Debarred | 51.48. |
| Greenwood Floor | 602371856 | GREENF*948O6 | | Debarred Until Penalties Paid | 39.12. |
| GUTHRIE'S CONSTRUCTION CO | 601499082 | WASHIGC021L2 | Scott Guthrie | Debarred | 18.27. |
| HOMEWORKS LLC | 603022852 | HOMEWL*903MW | Clayton Leighton | Debarred | 18.27. |
| IPS Inc. | 601926046 | | | Debarred Until Penalties Paid | 39.12. |
| IPS Inc. | 601926046 | | | Debarred Until Penalties Paid | 39.12. |
| J&P Plumbing | 601418659 | JPPLU**055PQ | | Debarred Until Penalties Paid | 39.12. |
| JADE GROUP GENERAL CONTRACTORS | 602668661 | JADEGGG882JP | Abboud Kourieh | Debarred | 18.27. |
| Janet Seekins | 602704285 | | Janet Seekins | Debarred Until Penalties Paid | 39.12. |
| Janet Seekins | 602704285 | | Janet Seekins | Debarred Until Penalties Paid | 39.12. |
| JC CONSTRUCTION | 601952953 | | Debi C Escobar<br>Jesus O Escobar | Debarred | 51.48. |
| Jeff A Talley | | | | Debarred | 18.27. |
| JP'Z | 602627204 | JPZPAPI940L9 | | Debarred Until Penalties Paid | 39.12. |
| JP'Z | 602627204 | JPZPAPI940L9 | | Debarred Until Penalties Paid | 39.12. |
| KOSMIN CONSTRUCTION LLC | 602560420 | | Vitaliy V Kosmin | Debarred | 51.48. |
| KOSMIN CONSTRUCTION LLC | 602560420 | | Vitaliy V Kosmin | Debarred | 51.48. |
| Kurt Construction Inc. | 601294653 | KURTCI*098L1 | | Debarred Until Penalties Paid | |
| L T Construction | 602958184 | | | Debarred | 18.27. |
| Lasting Impressions Concrete Flooring | 601728232 | LASTIIC044OZ | | Debarred Until Penalties Paid | 39.12. |
| Len Golding Himself, Inc. | | | Len Golding | Debarred Until Penalties Paid | 39.12. |
| LLL MAINTENANCE | 603075654 | | | Debarred | 18.27. |
| LLL MAINTENANCE | 603075654 | | Timothy Dale Dickson | Debarred | 51.48. |
| Logic Systems | 601577238 | LOGICS*066PF | | Debarred Until Penalties Paid | |
| MA CONSTRUCTION | 602839289 | | | Debarred | 18.27. |
| MA CONSTRUCTION | 602839289 | | Lydia Warren<br>Michael Warren | Debarred | 51.48. |
| MAJESTIC GLASS | 602868569 | | | Debarred | 18.27. |

LAKESIDE INDUSTRIES
NOT THERE

**CONTRACT DOCUMENTS**
**FOR THE CONSTRUCTION OF**

# 2013 HMA OVERLAY - EAST SCOTT AVENUE

**FOR THE**

**CITY OF WOODLAND**

**MAY 22, 2013**

**WOODLAND JOB NUMBER: CAP-13-05**

**Prepared By:**


Bart Stepp, PE
Public Works Director
City of Woodland
PO Box 9; 300 E. Scott Ave.
Woodland, WA 98674
(360) 225-7999


BART EDWARD STEPP
STATE OF WASHINGTON
37614
REGISTERED
PROFESSIONAL ENGINEER

5/22/13

# TABLE OF CONTENTS

## 2013 HMA OVERLAY - EAST SCOTT AVENUE

### CITY OF WOODLAND, WASHINGTON


INVITATION TO BID

PART I – BIDDING DOCUMENTS

Bid Instructions
Bid Proposal Form
Bid Bond
Bidder Qualifications

PART II – CONTRACT FORMS

Agreement
Payment Bond
Performance Bond
Notice of Award
Notice to Proceed
Change Order

PART III – CONDITIONS OF THE CONTRACT

City of Woodland Special Provisions

PART IV – CONTRACT DRAWINGS

C1 – HMA Overlay - East Scott Avenue Site Plan
T-01 – Concrete Curbs
T-07 – Sidewalk Detail
T-14 – Combination Ramp Construction
T-16 – Parallel Ramp
T-18 – Curb Ramp for Limited ROW Areas
T-20 – Standard Landing Cross Sections C-C and D-D
T-21 – Ramp Lip and Detectable Warning Pattern

**INVITATION TO BID**
**2013 HMA OVERLAY - EAST SCOTT AVENUE**

The following project will be accomplished as a **PUBLIC WORKS PROJECT** and will be subject to prevailing wage laws of the State of Washington. This project is being funded through a Transportation Improvement Board (TIB) Grant.

Sealed proposals for furnishing all materials, labor and equipment for the following described work will be received by the City of Woodland at the City Hall Annex, 230 Davidson Avenue, Woodland, WA 98674 until June 11, 2013 at 2 PM. If forwarded by mail, the sealed envelope containing the proposal shall be enclosed in another envelope addressed to the City of Woodland, 230 Davidson Avenue, Woodland, Washington 98674. Bids will not be accepted via facsimile or electronic mail. Each proposal shall be completely sealed in a package addressed as required. Sealed bids will be publicly opened and read at 2:15 PM on June 11, 2013 at Woodland City Hall, 100 Davidson Avenue, Woodland, WA 98674. A contract will be awarded or all bids rejected within 45 days after the bid opening.

PROJECT NAME: 2013 HMA Overlay - East Scott Avenue

PROJECT DESCRIPTION: Project consists of grinding 3" of existing asphalt on E Scott Avenue from Atlantic Avenue to SR-503 and then placing 3" of PG 64-22 Asphalt over the ground area. On E Scott Avenue from Atlantic to Old Pacific Highway work will be done on the full paved width from gutter to gutter. On E Scott Avenue from Old Pacific Highway to SR 503 work will be done from drainage channel to drainage channel. Work also includes the installation of 6 ADA concrete ramps along E Scott Avenue between Atlantic and Old Pacific Highway. The E Scott Avenue and Old Pacific Highway Intersection will not be ground and paved. Because traffic control devices will need to be placed on SR 503 and Atlantic Avenue the contractor will need to get a traffic control permit from **WSDOT** before a notice to proceed will be issued.

The issuing office for Contract Documents is the City of Woodland Public Works, PO Box 9; 300 E. Scott Ave., Woodland, WA 98674, (360) 225-7999. Plans will be available starting May 22, 2013. There will be a $20 fee for hardcopies of contract documents. Electronic versions of contract documents will be e-mailed for free. A pre-bid conference will not be held. To check plan availability and/or plan holder's list call 360-225-7999. Technical inquiries regarding the project should be directed to Bart Stepp, Public Works Director, City of Woodland Public Works, PO Box 9; 300 E. Scott Ave., Woodland, WA 98674, (360) 225-7999. All proposals must be submitted on the regular form furnished with the specifications. Work shall be completed within thirty (30) working days after receipt of Notice to Proceed.

State Sales Taxes -- the provisions of Section 1-07.2(1) - Rule 171 – apply to this project. The Contractor shall include Washington State Retail Sales Taxes in the unit bid prices for the materials, equipment, and supplies purchased for this project.

All construction and material, unless otherwise specified, shall be in accordance with the 2012 Standard Specifications and Standard Plans for Road, Bridge and Municipal Construction as prepared by the Washington State Department of Transportation and as amended under Amendments to the Standard Specifications, and the American Public Works Association, and the City of Woodland Engineering Standards for Construction.

The CITY OF WOODLAND reserves the right to cancel this request or reject any and all bids received or to waive any minor formalities of this call if in the judgment of the City Council the best interest of the City would be served.

# PART I- BIDDING DOCUMENTS

# INSTRUCTIONS TO BIDDERS

## 1. Intent of Plans and Specifications

It is the intention of these specifications to provide for careful, thorough and workmanlike construction procedures in the installation of materials and equipment and in the manufacture and delivery of such materials and equipment. The bidder to whom the contract is awarded shall furnish all the material and labor necessary to complete said contract in accordance with all of its terms and conditions.

The plans and specifications shall be considered and used together. Anything appearing as a requirement of either shall be accepted as applicable to both even though not so stated therein or shown. The Engineer may furnish supplemental plans and specifications to define more clearly any requirement of the original documents; these shall be accepted by the Contractor as of the same force and effect as though they had been included among the listed drawings and in case of any conflict between the listed and the supplemental drawings, the latter shall govern. The Contractor shall not be entitled to extra payment because of his compliance with the requirements of such supplemental drawings unless they contain new requirements involving costs which clearly could not have been anticipated by an experienced contractor in his examination of the original listed drawings or could not reasonably be inferred there from the requirements of the contract.

All specifications and notes appearing on the plans shall have the same force and effect as though they were repeated herein and by this reference are incorporated herein and made a part hereof.

## 2. Examination of the Contract Documents

Each bidder shall thoroughly examine and be familiar with legal and procedural documents, general conditions, special provisions, specifications, drawings and addenda (if any). The submission of a proposal shall constitute an acknowledgment that the bidder has thoroughly examined and is familiar with the contract documents. The failure or neglect of a bidder to receive or examine any of the contract documents shall in no way relieve him from any obligations with respect to his proposal or to the contract. No claim for additional compensation will be allowed which is based upon a lack of knowledge of any contract document, and the Owner will in no case be responsible for any loss or for unanticipated costs that may be suffered by the Contractor as a result of conditions pertaining to the work.

## 3. Examination of Site and Conditions

Before making a proposal, the bidder shall examine the site of the work and ascertain for himself all the physical conditions in relation thereto. Failure to take this precaution shall not release him from his obligation as implied by the proposal he submits nor excuse him from performing the work in strict accordance with the requirements of the contract documents. No statement made by any officer, agent, or employee of the Owner pertaining to the site of the work or the conditions under which the work must be performed will be binding on the Owner.

## 4. Inclement Weather

The City of Woodland is subject to inclement weather through the winter and spring months. Severe rain and wind storms may occur in addition to snow and ice. The Contractor should be aware of the potential for inclement weather and plan the project accordingly.

## 5. Addenda and Interpretations of Documents

No interpretation of meaning of the plans, specifications or other pre-bid documents will be made to any bidder orally. Every request for such interpretation shall be submitted in writing, addressed to City of Woodland, and to be given consideration, shall be received at least five working days prior to date fixed for opening bids. Any and all such interpretations and any supplemental instructions will be in the form of written addenda to the specifications which, if issued, will be mailed, faxed or otherwise delivered to each prospective bidder. Failure of any bidder to receive any such addendum shall not relieve such bidder from any obligation under his bid as submitted. All addenda so issued shall become a part of the contract documents. Where changes to plans, specifications or both or supplemental information of significant importance, additional bid time will be provided.

## 6. Preparation of Proposal

Bids must be submitted by filling in with ink (or typing), on the Form headed "Bid Proposal," each and every blank on each schedule for which the bidder has submitted a proposal. If the bidder is required to provide a special form appropriate to the nature of his bid, then such form shall be complete in all respects as required by the specifications if it is to merit consideration by the Owner.

All bid prices must be equal to the Bidders estimated cost to perform the work. Prices which are weighted and disproportionate to the actual cost, as may be compared to other Bidders and evaluation by the Engineer, may be considered non-responsive and their bid rejected. If the proposal is made by a partnership, it should contain the name of each partner and should be signed in the firm name, followed by the signature of partner or that of a person duly authorized to act for and on behalf of such partnership. If made by a corporation, the proposal should be signed with the name of the corporation and the state in which incorporated, followed by the written signature of the qualified officer and the designation of the office he holds in the corporation. The address of the person, firm or corporation in whose behalf the proposal is submitted shall be given. The bidder shall comply with all other specific requirements of the proposal form.

## 7. Alteration of Documents Prohibited

Except as may be provided otherwise herein, proposals which are incomplete, are conditioned in any way which the plans or specifications do not authorize, contain unverified erasures or alterations, include items which are not named in the proposal form or which are unlawful, may be rejected as non-responsive.

## 8. Submission of Proposal

Each proposal shall be completely sealed in a package addressed as required by the Invitation to Bid, marked with the name of the bidder and the title of the project, and must be delivered to Woodland City Hall Annex, 230 Davidson Avenue, at or before 2 P.M. on June 11, 2013. If forwarded by mail, the sealed envelope containing the proposal shall be enclosed in another envelope addressed to the City of Woodland, 230 Davidson Avenue, Woodland, Washington 98674.

## 9. Modification of Proposal

Change in a proposal already delivered will be permitted only if a request for the privilege of making such modification is made in writing signed by the bidder and the specific modification itself is stated prior to the bid opening on June 11, 2013.

## 10. Substitutions

Approval of materials to be used on the project and possible substitutions thereof shall not be addressed during the bidding process. Materials shall meet the specifications and the bids shall be based on specified items.

## 11. Bid Security

Each bid must be accompanied by cash, certified check of the bidder, or a bid bond duly executed by the bidder as principal and having as surety thereon a surety company authorized to issue bonds in Washington in the amount of 5% of the bid. Such cash, checks or bid bonds will be returned promptly after the Owner and the accepted bidders have executed the contract, or, if no award has been made within forty-five (45) days after the date of the opening of bids, upon demand of the bidder at any time thereafter, so long as he has not been notified of the acceptance of his bid. The successful bidder, upon his failure or refusal to execute and deliver the contract, bonds and certificates of insurance required within ten (10) calendar days after he has received notice of the acceptance of his bid, shall forfeit to the Owner, as liquidated damages for such failure or refusal, the security deposited with his bid. Attorney-in-fact who signs bid bonds or contract bonds must file with each bond a certified and effectively dated copy of their power of attorney.

## 12. Withdrawal of Proposal

A proposal may be withdrawn at any time prior to the bid opening.

## 13. Opening Bids

All bids will be opened at 2:15 p.m. on June 11, 2013, at Woodland City Hall - 100 Davidson Avenue - Woodland, WA 98674. All bid proposals received prior to the scheduled closing time and which are not withdrawn as above provided, will be publicly opened and read aloud even though there may be irregularities or informalities therein, except that any form required as part of the proposal (see Bidder's Checklist below) which is not signed, said proposal will not be read and consequently, will be rejected without consideration.

## 14. Award of Contract

Within forty-five (45) calendar days after the opening of the proposals, the Owner will accept one or more of the proposals or reject one or more bids for good cause. Performance and Payment Bonds in the amount of one-hundred percent of the contract price, with a Corporate Surety approved by the Owner, will be required for the faithful performance of the contract. The bond forms contained in the contract documents must be utilized. In addition all contractual forms contained in the Contract Documents will be required for the faithful performance of the contract.

## 15. Basis of Award

If the owner awards the contract, the award will be given to the lowest responsive, responsible, qualified Bidder submitting the lowest Bid Proposal acceptable to the Owner. The city reserves the right to select one or both of the alternatives in the bid proposal.

## 16. Tied Bids

Tied bids will be resolved per the procedure in the 2012 Standard Specifications and Standard Plans for Road, Bridge, and Municipal Construction as prepared by the Washington State Department of Transportation.

## 17. Rejection of Bids

The Owner reserves the right before or after opening to reject any or all bids or to waive any informality therein if it is believed that the best interest of the Owner will be served thereby.

## 18. Soils Investigations

The bidder is responsible for conducting his own subsurface investigations, if he deems it prudent or necessary.

## 19. Bidder's Risk

The submission of bid shall constitute an acknowledgment that the bidder has thoroughly examined and is familiar with the contract documents, and has reviewed and inspected all applicable statutes, regulations, ordinances and resolutions dealing with or related to the service to be provided herein. The failure or neglect of a bidder to examine such documents, statutes, regulations, ordinances or resolutions shall in no way relieve the bidder from any obligations with respect to the bidder's bid or to the contract. No claim for additional compensation will be allowed which is based upon a lack of knowledge of any contract documents, statutes, regulations, ordinances or resolutions.

## 20. Employment Security Department Certificate of Coverage

Contractors must supply with their bid package a certificate of coverage from the Employment Security Department that states they are eligible to bid on this project. To obtain a certificate of coverage go to www.esd.wa.gov/uitax/public-works.php and click on “Bid Letter” link located in the answer to the second question on that webpage.

## 21. E-Verify Affidavit

The City of Woodland participates in **E-Verify**. E-Verify is an electronic program run by Homeland Security that is designed to verify the documentation of job applicants. The contractor awarded this project must sign and submit an Affidavit of Compliance with E-Verify before a notice to proceed is issued.

## 22. Woodland Business License

The contractor awarded the project must obtain a City of Woodland business license before the City will issue a notice to proced. For information on business licenses, call (360) 225-8281.

## 23. Wage Law Intents and Affidavits

If awarded the project, the contractor and each subcontractor shall complete or have on file a current "Statement of Intent to Pay Prevailing Wages" (Form L&I Number F700-029-000) before payment will be made for work performed. An "Affidavit of Wages Paid" (Form L&I Number F700-007-000) shall be required upon final acceptance of the public works project by the City. These forms are available from Washington State Department of Labor & Industries and can be filed electronically at:

http://www.lni.wa.gov/TradesLicensing/PrevWage/IntentAffidavits/File/default.asp

The applicable prevailing wages for this project have an effective date of June 11, 2013 and are available electronically from the Washington State Department of Labor & Industries and can be found at:

https://fortress.wa.gov/lni/wagelookup/prvWagelookup.aspx

## 24. Bidder Requirement

By signing the Bid Proposal Form, the contractor declares that before preparing their bid, they read carefully the specifications and requirements for bidders and that their bid is made with the full knowledge of the kind, quality and quantity of services and equipment to be furnished, and their said bid is as stated on these pages.

## 25. Bidder's Checklist

Bidder shall complete the following forms and shall submit them with the Bid Proposal:

Bid Proposal Form
Bid Bond
Bidder Qualifications
Employment Security Department Certificate of Coverage Letter

## BID PROPOSAL FORM

TO: City of Woodland
PO Box 9
230 Davidson Ave.
Woodland, Washington 98674

FROM: Bidder _____

Address _____

_____

Telephone _____

The undersigned, as bidder, declares that we have examined all the contract documents and that we will contract with the City of Woodland to do everything necessary to complete the work as outlined on the plans and specifications for the 2013 HMA Overly - East Scott Avenue.
.
We acknowledge that addenda numbers _____ to _____ have been delivered to us and have been examined as part of the contract documents. We agree that the Qualification of Bidder shall form a part of this proposal.

If our BID is accepted, we agree to sign the contract form and to furnish the contract bond and the required evidences of insurance within ten (10) calendar days after receiving written notice of the award of contract.

We further agree, if our BID is accepted and a contract for performance of work is entered into with the City of Woodland, to so plan the work and to prosecute it with such diligence that all of the work shall be completed within the time period stated in the contract. We understand that the City of Woodland reserves the right to reject any or all bids and to determine which proposal is, in the judgment of the City of Woodland, the lowest responsible bid, and which proposal, if any, should be accepted in the best interests of the City of Woodland and that the City of Woodland also reserves the right to waive any informalities in any proposal or bid.

We further state that we have not, either directly or indirectly, entered into any agreement, participated in any collusion, or otherwise taken any action in restraint of free competitive bidding in connection with such contract.

Bidder agrees that the work will be completed within thirty (30) working days after the date when the notice to proceed is received from the City of Woodland.

We propose to perform the work at the prices listed in the following bid schedule(s):

Notes:
(1) See Special Provisions and the Standard Specifications for State sales tax requirements.
(2) The City reserves the right to adjust the scope of this work to match available funds.
(3) The City reserves the right to reject any or all bids.
(4) The table below provides a list of items required to complete the project. It is the contractor's responsibility to complete the project scope to all required standards and specifications.
(5) The City reserves the right to include the Alternative Bid Item as part of the total bid price.

**2013 HMA OVERLAY - EAST SCOTT AVENUE PROJECT BID PROPOSAL:**

| Item No. | Std. Spec. | Description | Estimated Quantity | Units | Unit Price | Total Price |
|---|---|---|---|---|---|---|
| 1. | 1-07 | Spill Prevention, Control and Countermeasure Plan | 1 | LS | | |
| 2. | 1-09 | Mobilization | 1 | LS | | |
| 3. | 1-10 | Traffic Control Supervisor | 1 | LS | | |
| 4. | 1-10 | Temporary Traffic Control | 1 | LS | | |
| 5. | 1-10 | Flaggers and Spotters | 120 | HR | | |
| 6. | 2-01 | Roadside Cleanup | 1 | LS | | |
| 7. | 5-04 | HMA Cl. ½" PG 64-22 (3" Overlay) | 1375 | TN | | |
| 8. | 5-04 | Planing Bituminous Pavement | 8000 | SY | | |
| 9. | 5-04 | Material Testing | 1 | LS | | |
| 10. | 6-02 | Replace existing sidewalk or ramp with new Concrete Sidewalk ADA Ramp | 4 | EA | | |
| 11. | 6-02 | Remove existing sidewalk ramp with sidewalk and place new Concrete ADA ramp in new location | 2 | EA | | |
| 12. | 8-01 | Erosion Control | 1 | LS | | |
| **Grand Total HMA Overlay - East Scott Avenue** | | | | | **$** | |

BIDDER acknowledges receipt of the following ADDENDUM:

| Addendum No. | Addendum Receipt Date | Signed Acknowledgment |
|---|---|---|
| 1 | _____ | _____ |

WASHINGTON STATE AND LOCAL SALES TAX. Sales Tax (7.7%) shall be included in the unit bid prices for the material and supplies used for the project.

BIDDER'S ADDRESS. Notice of Acceptance of this bid or requests for additional information should be addressed to the undersigned at the address stated below.

NON-COLLUSION DECLARATION. I, by signing the proposal, hereby declare, under penalty of perjury under the laws of the United States that the following statements are true and correct:

1. That the undersigned person(s), firm, association or corporation has (have) not, either directly or indirectly, entered into any agreement, participated in any collusion, or otherwise taken any action in restraint of free competitive bidding in connection with the project or which this proposal is submitted.

2. That by signing the signature page of this proposal, I am deemed to have signed and have agreed to the provisions of this declaration.

NOTES:

1. This proposal form is not transferable and any alteration of the firm's name entered hereon without prior permission from the Public Works Director will be cause for considering the proposal irregular and subsequent rejection of the bid.

SIGNATURE

Date: _____ _____

Proper Name of Bidder

Contractor's License No.: _____

By: _____

Company Name

_____

Address

_____

City State Zip

# BID BOND

**KNOW ALL MEN BY THESE PRESENTS**, that we, the undersigned, _____ _____ as Principal, and _____ as Surety, are hereby held and firmly bound unto _____ as Owner, in the penal sum of: _____ for the payment of which, well and truly to be made, we hereby jointly and severally bind ourselves, successors and assigns.

**SIGNED**, this _____ day of _____, 2013.

The condition of the above obligation is such that whereas the Principal has submitted to: _____ a certain Bid attached hereto and hereby made a part hereof to enter into a contract in writing, for the _____.

**NOW, THEREFORE,**

a) If said Bid shall be rejected, or

b) If said Bid shall be accepted and the Principal shall execute and deliver a contract in the form of contract attached hereto (properly completed in accordance with said Bid) and shall furnish a bond for his faithful performance of said contract, and for the payment of all persons performing labor or furnishing materials in connection therewith, and shall in all other respects perform the agreement created by the acceptance of said Bid, then this obligation shall be void, otherwise the same shall remain in force and effect; it being expressly understood and agreed that the liability of the Surety for any and all claims hereunder shall, in no event, exceed the penal amount of this obligation as herein stated.

The Surety, for value received, hereby stipulates and agrees that the obligations of said Surety and its bond shall be in no way impaired or affected by an extension of the time within which the Owner may accept such Bid; and said Surety does hereby waive notice of any such extension.

**IN WITNESS WHEREOF**, the Principal and the Surety have hereunto set their hands and seals, and such of them as are corporations have caused their corporate seals to be hereto affixed and these presents to be signed by their proper officers, the day and year first set forth above.

_____ (L.S.)
**Principal** **Title**

_____
**Surety**

By: _____

**IMPORTANT:** Surety Companies executing bonds must appear on the Treasury Department's most current list (Circular 570 as amended) and be authorized to transact business in the state where the project is located.

## BIDDER QUALIFICATIONS

**PROJECT: 2013 HMA OVERLAY - EAST SCOTT AVENUE**

If the above contract is awarded to our company, the following persons will be authorized to sign change orders, progress payments and similar documents for the company (names and positions):

_____

_____

The contractor's superintendent at the job site per Article 1-05.13 of the Standard Specifications will be (give full name):

_____

The last three projects completed or substantially completed by our company involving similar construction work are as follows:

1. Project Name: _____

   Dollar amount of Contract: $_____

   Owner: _____

   Owner's Representative: _____ Phone No.: _____

   Contractor's Superintendent on this project: _____

   Brief Description of Project Scope: _____

   _____

   _____

2. Project Name: _____

   Dollar amount of Contract: $_____

   Owner: _____

   Owner's Representative: _____ Phone No.: _____

   Contractor's Superintendent on this project: _____

   Brief Description of Project Scope: _____

   _____

   _____

3. Project Name: _____

Dollar amount of Contract: $_____

Owner: _____

Owner's Representative: _____ Phone No.: _____

Contractor's Superintendent on this project: _____

Brief Description of Project Scope: _____

_____

_____

Title of Person completing this form: _____

Signature: _____ Date: _____

Phone No.: _____

# PART II- CONTRACT FORMS

## AGREEMENT

**THIS AGREEMENT,** made this _____ day of _____, 2013, by and between the City of Woodland, Washington, hereinafter called "Owner," and of _____., doing business as (an individual) or (a partnership) or (a corporation), hereinafter called "Contractor."

**WITNESSETH:** that for and in consideration of the payments and agreements hereafter mentioned:

The Contractor will furnish all of the material, supplies, tools, equipment, labor, and other services necessary for the construction and completion of the project described herein.

PROJECT DESCRIPTION: Project consists of grinding 3" of existing asphalt on E Scott Avenue from Atlantic Avenue to SR-503 and then placing 3" of PG 64-22 Asphalt over the ground area. On E Scott Avenue from Atlantic to Old Pacific Highway work will be done on the full paved width from gutter to gutter. On E Scott Avenue from Old Pacific Highway to SR 503 work will be done from drainage channel to drainage channel. Work also includes the installation of 6 ADA concrete ramps along E Scott Avenue between Atlantic and Old Pacific Highway. The E Scott Avenue and Old Pacific Highway Intersection will not be ground and paved. Because traffic control devices will need to be placed on SR 503 and Atlantic Avenue the contractor will need to get a traffic control permit from **WSDOT** before a notice to proceed will be issued.

The Contractor will commence the work required by the Contract Documents within ten (10) calendar days after the date of the Notice to Proceed and will complete all work required by the Contract Documents within thirty (30) working days of the same date unless the period for completion is extended otherwise by the Contract Documents.

The Contractor agrees to perform all of the work described in the Contract Documents and comply with the terms therein for the total price of _____

_____($_____).

The term "Contract Documents" means and includes the following:

| | |
|---|---|
| Invitation to Bid<br>Instructions to Bidders<br>Bid Proposal Form<br>Agreement<br>Payment Bond<br>Performance Bond<br>Notice of Award<br>Notice to Proceed | Change Order<br>City of Woodland Special Provisions<br>Contract Bid Items<br>Contract Drawings Prepared or Issued by the City of Woodland<br>Standard Plans<br>Addendum<br>All items included within these Contract Documents. |

The Owner will pay to the Contractor in the manner and at such times as set forth in the General Conditions such amounts as required by the Contract Documents.

This Agreement shall be binding upon all parties hereto and their respective heir, executors, administrators, successors, and assigns.

**IN WITNESS WHEREOF,** the parties hereto have executed, or caused to be executed by their duly authorized officials, this Agreement in duplicate, each of which shall be deemed an original, on the date first above written.

**OWNER:**

By: _____

Typed Name: _____

Title: _____

ATTEST:

_____

Typed Name: _____

Title: _____

**CONTRACTOR:**

By: _____

Typed Name: _____

Title: _____

Address: _____

_____

ATTEST:

_____

Typed Name: _____

Title: _____

**PAYMENT BOND**

KNOW ALL MEN BY THESE PRESENTS: That, WHEREAS, the City of Woodland, State of Washington, on _____, 2013, has awarded to_____, hereinafter designated as "Principal," a Contract for construction of the **2013 HMA OVERLAY - EAST SCOTT AVENUE**, the terms and provisions of which contract are incorporated herein by reference, and;

WHEREAS, said Principal is required to furnish a bond in connection with this said Contract, providing that if said Principal, or any of his or its subcontractors, shall fail to pay for any materials, provisions, provender or other supplies or teams used in, upon, for, or about the performance of the work contracted to be done, or any other work or labor done thereon of any kind, the Surety of this body will pay the same to extend hereinafter set forth;

NOW, THEREFORE, we the Principal and _____, as Surety, are held and firmly bound unto the City of Woodland, State of Washington, in the penal sum of _____ ($ , . ), lawful money of the United States, being one hundred percent (100%) of the Contract amount for the payment of which sum well and truly to be made, we bond ourselves, our heirs, executors, administrators and successors, jointly and severally, firmly by these presents.

NOW, THEREFORE, if the above bounden Principal or any of his subcontractor shall promptly make payment to all persons supplying labor and material or amounts due in the prosecution of the work provided for in said Contract, and any and all duly authorized modifications of said Contract that may hereafter be made, then this obligation shall be void; otherwise, this obligation shall remain in full force and virtue; and if the bounden Principal or any of his subcontractors fails to promptly pay any of the persons or amounts due with respect to work or labor performed by any such claimant, the Surety will pay for the same, in an amount not exceeding the sum specified in this bond, and also in case suit brought upon this bond, a reasonable attorney's fee, be fixed by the court; and this bond shall insure to the benefit of any persons so as to give a right of action to such persons or their assigns in any suit brought upon this bond.

The bond shall insure to the benefit of any all persons, companies and corporations entitle to file claims, so as to give a right of action to them or their assigns in any suit brought upon this bond.

And the said Surety, for value received, hereby stipulates and agrees that no change, extension of time, alteration or addition to the terms of the Contract, or to the work to be performed hereunder, or the Specifications accompanying the same shall in any wise affect its obligations on this bond; and it does hereby waive notice of any such change, extension of time, alteration or addition to the terms of the Contract, or to the work or to the Specifications.

IN WITNESS WHEREOF, the above bounden parties have executed this instrument under their seals this _____ day of _____, 2013, the name and corporate seal of each corporate party being hereto affixed and these presents duly signed by its undersigned representative, pursuant to authority of its governing body.

| | |
|---|---|
| _____ | _____ |
| _____ | _____ |
| _____ | _____ |
| Attorney-in-Fact, Surety | Principal |

_____

Name and Address
Local Office of Agent

NOTE: Date of Bond must not be prior to date of contract. If Contractor is Partnership, all partners should execute bond.

**IMPORTANT: Surety Companies executing Bonds must appear on the Treasury Department's most current list (Circular 570 as amended) and be authorized to transact business in the State where the project is located.**

**PERFORMANCE BOND**

KNOW ALL MEN BY THESE PRESENTS: That, WHEREAS, the City of Woodland, State of Washington, on _____, 2013, has awarded to_____, hereinafter designated as "Principal," a Contract for construction of the **2013 HMA OVERLAY - EAST SCOTT AVENUE**, the terms and provisions of which contract are incorporated herein by reference, and;

WHEREAS, said Principal is required under the terms of said Contract to furnish a bond for the faithful performance of said Contract;

NOW, THEREFORE, we the Principal and _____, as Surety, are held and firmly bound unto the City of Woodland, State of Washington, in the penal sum of _____ ($ , . ), lawful money of the United States, being one hundred percent (100%) of the Contract amount for the payment of which sum well and truly to be made, we bind ourselves, our heirs, executors, administrators and successors, jointly and severally, firmly by these presents.

THE CONDITION OF THIS OBLIGATION IS SUCH, that if the above bound Principal, his or its heirs, executors, administrators, successors, or assigns, shall in all things stand to and abide by, and well and truly keep and faithfully perform the covenants, conditions, and agreements in the said Contact and any alterations made as therein provided, on his or their part, to be kept and performed at the time and in the manner therein specified, and in all respects according to their true intent and meaning, and shall indemnify and save harmless, its officers and agents, as therein stipulated, then this obligation shall become null and void; otherwise it shall be and remain in full force and virtue.

As a condition precedent to the satisfactory completion of the said Contract, the above obligation to the amount of _____($ , . ), shall hold good for a period of one (1) year after the completion and acceptance of the said work, during which time if the above bounden Principal, his or its heirs, executors, administrators, successors or assigns shall fail to make full, complete and satisfactory repair and replacements or totally protect the said from loss or damage made evident during said period of one (1) year from the date of acceptance of said work, and resulting from or caused by defective materials or faulty workmanship in the prosecution of the work done, the above obligation in the said sum of _____

_____($ , . ), shall remain in full force and virtue; otherwise the above obligation shall be void.

And the said Surety, for value received, hereby stipulates and agrees that no change, extension of time, alteration of addition to the terms of the Contract or to the work to be performed hereunder or the Specifications accompanying the same shall in any wise affect its obligations on this bond; and it does hereby waive notice of any such change, extension of time alteration or addition to the terms of the Contract, or to the work, or to the Specifications.

In the event the City of Woodland or its successors or assigns, shall be the prevailing party in an action brought upon this bond, then in addition to the penal sum hereinabove specified, we agree to pay to said, or its successors or assigns, a reasonable sum on account of attorney's fees in such action, which sum shall be fixed by the court.

IN WITNESS WHEREOF, the above bounden parties have executed this instrument under their seals this _____ day of _____, 2013, the name and corporate party being hereto affixed and these presents duly signed by its undersigned representative, pursuant to authority of its governing body.

| | |
|---|---|
| _____ | _____ |
| _____ | _____ |
| _____ | _____ |
| Attorney-in-Fact, Surety | Principal |

_____

Name and Address
Local Office of Agent

NOTE: Date of Bond must not be prior to date of contract. If Contractor is Partnership, all partners should execute bond.

**IMPORTANT: Surety Companies executing Bonds must appear on the Treasury Department's most current list (Circular 570 as amended) and be authorized to transact business in the State where the project is located.**

**NOTICE OF AWARD**

DATE: _____, 2013

TO: _____

_____

_____

PROJECT NAME: 2013 HMA Overlay - East Scott Avenue

The Owner has considered the Bid submitted by you for the above described work in response to its invitation to bid to street sweepers on the MRSC Small Works Roster, and Contract Documents.

You are hereby notified that your bid has been accepted for items in the amount of _____ _____($ _____).

You are required by the Bidding Documents to execute the Agreement and furnish the required Certificates of Insurance (including complete insurance coverage for the Owner and City of Woodland) within ten (10) calendar days from the date of this notice to you.

Intent to pay prevailing wages shall be demonstrated before Notice to Proceed is executed.

If you fail to execute said Agreement and to furnish said Bonds within ten (10) calendar days from the date of this notice, said Owner will be entitled to such other rights as may be granted by law.

You are required to return an acknowledged copy of this Notice of Award to the Owner.

Dated this _____day of _____, 2013.

City of Woodland, Owner

By: _____

Title: _____

ACCEPTANCE OF NOTICE

Receipt of the above NOTICE TO AWARD is hereby acknowledged.

Firm: _____, this _____ day of _____, 2013 .

By: _____

Title: _____

## NOTICE TO PROCEED

DATE: _____, 2013

**TO:** _____

_____

_____

**PROJECT NAME: 2013 HMA Overlay - East Scott Avenue**

You are hereby notified to commence work in accordance with the Agreement dated: _____ _____, within ten (10) calendar days of the date of this notice, or _____, and you are to complete the work within thirty (30) working days after beginning construction. The latest date of completion is therefore, _____.

City of Woodland, Owner

By: _____

Title: _____

**ACCEPTANCE OF NOTICE**

Receipt of the above **NOTICE TO PROCEED** is hereby acknowledged.

Firm: _____, this the _____ day of _____, 2013

By:_____

Title: _____

**CHANGE ORDER**

CHANGE ORDER NO.:_____1_____

DATE:_____, 2013

AGREEMENT DATE: _____, 2013

PROJECT: ___2013 HMA Overlay - East Scott Avenue_____

OWNER:____City of Woodland_____

CONTRACTOR:_____

The following changes are hereby made to the Contract:

Justification:_____

_____

Original Contract Price was: _____

Previously Approved Changer Order(s): _____

Contract Prior to this Change Order: _____

Contract Price for this Changer Order will be increased/decreased by: _____

New Contract Price Including this Change Order will be : _____

Contract time will be (circle one) *increased* *decreased* (*unchanged)* by (____) working days.

The date for substantial completion as of the date of this Change Order, therefore, is: _____

_____.

To be effective, this Order must be approved by the federal agency if it changes the scope or objective of the Project, or as may otherwise be required by the Special Provisions.

Requested by: _____

Recommended by: _____

Ordered by: _____

Accepted by: _____

# PART III-CONDITIONS OF THE CONTRACT

# CITY OF WOODLAND SPECIAL PROVISIONS

**CITY OF WOODLAND**
**SPECIAL PROVISIONS**

STANDARD SPECIFICATIONS

The Standard Specifications for this project shall be the "2012 Standard Specifications for Road, Bridge, and Municipal Construction as prepared by the Washington State Department of Transportation and the Washington State Chapter of the American Public Works Association, and as amended under Amendments to the Standard Specifications.

All modifications made in these Special Provisions shall take precedence over the Standard Specifications and the Amendments to the Standard Specifications. The reference made herein shall only mean the inclusion of the specific technical section referenced, and shall include any amendments made, if applicable.

All number references in these Special Provisions shall be understood to refer to the section or subsection of the Standard Specifications bearing like numbers.

It should be understood that all references to state officers in the Standard Specifications shall mean the corresponding City of Woodland officers for the purpose of this contract. For example, all references to the Highway Commission shall mean the City of Woodland Council and all references to the Director of Highway shall mean the City's Public Works Director, etc. Also, any references to Thurston County shall be understood to mean the City of Woodland.

A copy of the Standard Specifications is available for review at the office of the Engineer.

## 1-01 DEFINITIONS AND TERMS

### 1-01.3 Definitions

Amend as follows:

Engineer. Woodland Public Works Director, or his designated representatives.

Owner. Council of the City of Woodland as represented by it's authorized officers, employees, or agents.

All references to "State Materials Laboratory" shall be revised to read "Contracting Agency designated location".

## 1-03 AWARD AND EXECUTION OF CONTRACT

### 1-03.2 Award of Contract

Add the following paragraph:

"The award of the contract shall be made only to responsible contractors that possess the potential ability to perform successfully under the terms and conditions of the Agreement. Consideration shall be given to contractor integrity, compliance with public policy, record of past performance, and financial and technical resources. Any and all

bids may be rejected when there are sound documented reasons for doing so. The Owner reserves the right to make these judgments. The Owner will award the contract within forty-five (45) days after the Bid Opening.

The “lowest responsible Bidder” shall be determined from the Contract Unit Bid Prices and Bid Proposal if selected by the Owner.”

## 1-04 SCOPE OF WORK

Add the following paragraph:

Project consists of grinding 3” of existing asphalt on E Scott Avenue from Atlantic Avenue to SR-503 and then placing 3” of PG 64-22 Asphalt over the ground area. On E Scott Avenue from Atlantic to Old Pacific Highway work will be done on the full paved width from gutter to gutter. On E Scott Avenue from Old Pacific Highway to SR 503 work will be done from drainage channel to drainage channel. Work also includes the installation of 6 ADA concrete ramps along E Scott Avenue between Atlantic and Old Pacific Highway. The E Scott Avenue and Old Pacific Highway Intersection will not be ground and paved. Because traffic control devices will need to be placed on SR 503 and Atlantic Avenue the contractor will need to get a traffic control permit from **WSDOT** before a notice to proceed will be issued.

## 1-05 CONTROL OF WORK

### 1-05.3 Plans and Working Drawings

Add the following paragraph:

"The City will furnish to the Contractor, free of charge, three (3) copies of the contract documents. Additional copies of the contract documents may be obtained on request by paying a $20 fee. The Contractor shall keep one copy of the contract documents on the project, in good order, available to the Engineer and to his representatives. All plans, drawings, specifications, and copies thereof furnished by the Engineer are his property. They are not to be used on other work and, with the exception of the signed contract set, are to be returned to him on request at the completion of the work."

### 1-05.10(1) Guarantees

Add the following paragraph:

"The Contractor shall guarantee all work for a period of one year from and after the date of acceptance of the work by the Owner."

### 1-05.12 Final Acceptance

Add the following paragraphs:

"Prior to substantial completion, the City, with the approval of the Contractor, may use any completed or substantially completed portions of the work. Such use shall not constitute an acceptance of such portions of the work.

The acceptance by the Contractor of final payment shall be and shall operate as a release to the City of all claims and all liability to the Contract other than claims in stated amounts as may be specifically excepted by the Contractor in writing prior to the request for final payment for all things done or furnished in connection with this work and for every act and neglect of the City and it's agents and others relating to or arising out of this work. However, any payment, final or otherwise, or any acceptance, shall not release the Contractor or it's sureties from any obligations under the Contract Documents or the Performance and Payment Bonds or diminishes the City's rights under the guaranty provisions."

## 1-06 CONTROL OF MATERIAL

### 1-06.2(1) Samples and Tests for Acceptance

Section 1-06.2(2) is supplemental as follows:

Material sampling for testing may be performed up to and including the point of incorporation of the respective material into the project. The definition of "qualified testing personnel and calibrated or verified equipment" shall not be referenced to the WAQTC requirements.

The Contractor shall provide passing test results to the Engineer for all sources and materials proposed for the hot mix asphalt prior to use.

If material fails to meet specifications, and re-test is performed on material from the same source by a private laboratory, the re-testing shall be at the Contractor's expense.

## 1-07 LEGAL RELATIONS AND RESPONSIBILITIES TO THE PUBLIC

### 1-07.2 State Taxes

Add the following paragraph:

"Sales Tax will be included in the unit bid prices."

### 1-07.5(3) State Department of Ecology

**Sand and Gravel Source Compliance to the Clean Water Act**

Each source/supplier of sand and gravel for this project will provide either a current Sand and Gravel permit number issued by the Washington State Department of Ecology, or a current Application for Coverage, also issued by the Department of Ecology prior to source approval.

### 1-07.17 Utilities and Similar Facilities

Add the following paragraphs:

"The Contractor shall call the Northwest Utilities Notification Center (One Call Center) at 811 for field location, not less than two or more than ten working days before the scheduled date for commencement of excavation which may affect underground utility

facilities. The Contractor shall under no circumstances expose any utility without first obtaining permission from the appropriate utility agency.

The Contractor shall be solely and directly responsible to the Owner and Owners of Utilities for any and all damage, disruption of service, or claims which may result from the construction operations. The Contractor shall make all necessary arrangements for protection of existing power and telephone lines in the vicinity of this Contract that interfere with construction.

Neither the Owner nor its officers or agents shall be responsible to the Contractor for damages as a result of the Contractor's failure to protect utilities encountered in the work.

Restoration of utilities damaged by the Contractor, his agents or employees, shall be accomplished by the utility involved at the Contractor's expense."

**1-07.18 Public Liability and Property Damage Insurance**

Delete this section in its entirety, and replace it with the following:

**1-07.18 Insurance**
*(May 10, 2006 APWA GSP)*

**1-07.18(1) General Requirements**

A. The Contractor shall obtain the insurance described in this section from insurers approved by the State Insurance Commissioner pursuant to RCW Title 48. The insurance must be provided by an insurer with a rating of A-: VII or higher in the A.M. Best's Key Rating Guide, which is licensed to do business in the state of Washington (or issued as a surplus line by a Washington Surplus lines broker). The Contracting Agency reserves the right to approve or reject the insurance provided, based on the insurer (including financial condition), terms and coverage, the Certificate of Insurance, and/or endorsements.

B. The Contractor shall keep this insurance in force during the term of the contract and for thirty (30) days after the Physical Completion date, unless otherwise indicated (see C. below).

C. If any insurance policy is written on a claims made form, its retroactive date, and that of all subsequent renewals, shall be no later than the effective date of this Contract. The policy shall state that coverage is claims made, and state the retroactive date. Claims-made form coverage shall be maintained by the Contractor for a minimum of 36 months following the Final Completion or earlier termination of this contract, and the Contractor shall annually provide the Contracting Agency with proof of renewal. If renewal of the claims made form of coverage becomes unavailable, or economically prohibitive, the Contractor shall purchase an extended reporting period ("tail") or execute another form of guarantee acceptable to the Contracting Agency to assure financial responsibility for liability for services performed.

D. The insurance policies shall contain a "cross liability" provision.

E. The Contractor's and all subcontractors' insurance coverage shall be primary and non-contributory insurance as respects the Contracting Agency's insurance, self-insurance, or insurance pool coverage.

F. All insurance policies and Certificates of Insurance shall include a requirement providing for a minimum of 30 days prior written notice to the Contracting Agency of any cancellation in any insurance policy.

G. Upon request, the Contractor shall forward to the Contracting Agency a full and certified copy of the insurance policy(s).

H. The Contractor shall not begin work under the contract until the required insurance has been obtained and approved by the Contracting Agency.

I. Failure on the part of the Contractor to maintain the insurance as required shall constitute a material breach of contract, upon which the Contracting Agency may, after giving five business days notice to the Contractor to correct the breach, immediately terminate the contract or, at its discretion, procure or renew such insurance and pay any and all premiums in connection therewith, with any sums so expended to be repaid to the Contracting Agency on demand, or at the sole discretion of the Contracting Agency, offset against funds due the Contractor from the Contracting Agency.

J. All costs for insurance shall be incidental to and included in the unit or lump sum prices of the contract and no additional payment will be made.

**1-07.18(2) Additional Insured**

All insurance policies, with the exception of Professional Liability and Workers Compensation, shall name the following listed entities as additional insured(s):

- the City of Woodland and its officers, elected officials, employees, agents, and volunteers

The above-listed entities shall be additional insured(s) for the full available limits of liability maintained by the Contractor, whether primary, excess, contingent or otherwise, irrespective of whether such limits maintained by the Contractor are greater than those required by this Contract, and irrespective of whether the Certificate of Insurance provided by the Contractor pursuant to 1-07.18(3) describes limits lower than those maintained by the Contractor.

**1-07.18(3) Subcontractors**

Contractor shall ensure that each subcontractor of every tier obtains and maintains at a minimum the insurance coverages listed in 1-07.18(5)A and 1-07.18(5)B. Upon request of the Contracting Agency, the Contractor shall provide evidence of such insurance.

**1-07.18(4) Evidence of Insurance**

The Contractor shall deliver to the Contracting Agency a Certificate(s) of Insurance and endorsements for each policy of insurance meeting the requirements set forth herein when the Contractor delivers the signed Contract for the work. The certificate and endorsements must conform to the following requirements:

1. An ACORD certificate or a form determined by the Contracting Agency to be equivalent.
2. Copies of all endorsements naming Contracting Agency and all other entities listed in 1-07.18(2) as Additional Insured(s), showing the policy number. The Contractor may submit a copy of any blanket additional insured clause from its policies instead of a separate endorsement. A statement of additional insured status on an ACORD Certificate of Insurance shall <u>not</u> satisfy this requirement.
3. Any other amendatory endorsements to show the coverage required herein.

### 1-07.18(5) Coverages and Limits

The insurance shall provide the minimum coverages and limits set forth below. Providing coverage in these stated minimum limits shall not be construed to relieve the Contractor from liability in excess of such limits. All deductibles and self-insured retentions must be disclosed and are subject to approval by the Contracting Agency. The cost of any claim payments falling within the deductible shall be the responsibility of the Contractor.

### 1-07.18(5)A Commercial General Liability

A policy of Commercial General Liability Insurance, including:

Per project aggregate
Premises/Operations Liability
Products/Completed Operations for one year following final acceptance of the work.
Personal/Advertising Injury
Contractual Liability
Independent Contractors Liability
Stop Gap / Employers' Liability
Explosion, Collapse, or Underground Property Damage (XCU)
Blasting (only required when the Contractor's work under this Contract includes exposures to which this specified coverage responds)

Such policy must provide the following minimum limits:

| | |
|---|---|
| $1,000,000 | Each Occurrence |
| $2,000,000 | General Aggregate |
| $1,000,000 | Products & Completed Operations Aggregate |
| $1,000,000 | Personal & Advertising Injury, each offence |

Stop Gap / Employers' Liability

| | |
|---|---|
| $1,000,000 | Each Accident |
| $1,000,000 | Disease - Policy Limit |
| $1,000,000 | Disease - Each Employee |

### 1-07.18(5)B Automobile Liability

Automobile Liability for owned, non-owned, hired, and leased vehicles, with an MCS 90 endorsement and a CA 9948 endorsement attached if "pollutants" are to be transported. Such policy(ies) must provide the following minimum limit:

$1,000,000 combined single limit

### 1-07.18(5)C Workers' Compensation

The Contractor shall comply with Workers' Compensation coverage as required by the Industrial Insurance laws of the state of Washington.

## 1-08 PROSECUTION AND PROGRESS

### 1-08.5 Time For Completion

Add the following paragraph:

"The project shall be completed in its entirety within thirty working days (30) after the date of the Notice to Proceed."

The last two sentences in the first paragraph are revised to read:

When any of these holidays fall on a Sunday, the following Monday shall be counted a nonworking day. When the holiday falls on a Saturday, the preceding Friday shall be counted a nonworking day. The days between December 25 and January 1 will be classified as nonworking days.

**1-08.7 Maintenance During Suspension**

The Contractor shall maintain the erosion and sediment control even if the Contracting Agency is performing the routine maintenance work on the other items.

**1-10 TEMPORARY TRAFFIC CONTROL**

**1-10.2(2) Traffic Control Plans**

Add the following paragraphs:

"It shall be the Contractor's responsibility to prepare a detailed traffic control plan in accordance with Section 1-10.2(2) of the Standard Specifications.

Within five days from notice to proceed, and prior to the start of any construction, the Contractor shall submit a written traffic control plan to the City **WSDOT**. The traffic control plan shall be in strict conformance with the latest edition of the "Manual for Uniform Traffic Control Devices" and shall be subject to approval by **WSDOT** and the City of Woodland. Contractor must receive a Traffic Control Permit from **WSDOT** before a Notice to Proceed will be issued. The Contractor shall schedule two working days for the Engineer's approval of the traffic control plan. No work shall be completed on this project until the Engineer has provided written approval of the Contractor's traffic control plan. Time extensions will not be approved for any delays in the project as a result of the Contractor's failure to provide a written traffic control plan in strict conformance with these specifications. See Division 1 for additional requirements.

The proper signing and warning devices shall be in place to protect bicycle and pedestrian traffic at all times. It shall be the contractor's responsibility to monitor and maintain the TCD's as necessary.

Contractor must work with property owners to maintain acceptable access during construction. It is expected two lanes of traffic will be open when work is not being done. When contractor is working one lane of traffic must be maintained as much as possible.

All traffic control plans shall conform to Section1-10.2(3).

## 2-01 CLEARING, GRUBBING, AND ROADSIDE CLEANUP

### 2-01.4 Measurement

Add the following:

No unit of measurement shall apply to the lump sum price for "Roadside Cleanup".

"Roadside Cleanup" shall include minor grading of slopes and restoration of all property, landscaping, and approaches to original condition that are adjacent to, impacted by, or on which work has occurred. This work includes reseeding lawns disturbed by construction. Final clean up shall be to the satisfaction of the Engineer and per Section 1-04.11."

## 2-07 WATERING

Add the following:

The Contractor shall obtain water at his expenses, in a legal manner. The Contractor may not obtain water from natural sources without permission from local authorities that have jurisdiction.

## 5-04 HOT MIX ASPHALT

### 5-04.1 Hot Mix Asphalt

Add the following:

Any reference in the Plans or Specifications to Asphalt Concrete Pavement, ACP, or AC shall be equivalent to the terms Hot Mix Asphalt or HMA.

### 5-04.3 Construction Requirements

Add the following:

The Contractor shall tack and sand all edges, cold joints, and tapers which join existing asphalt pavement with new asphalt.

### 5-04.3(8)A1 General

Add the following:

"The contractor is required to supply compaction test results of all asphalt placement using a nuclear gauge testing unit. In place density must be at least 92% of theoretical maximum density per WSDOT FOP for AASHTO T 209. At least 1 asphalt sample for every day of placement will be taken to a certified laboratory to verify asphalt densities.

**5-04.5 Payment**

Add the following:

> "Material Testing, by lump sum amount, will cover all necessary asphalt testing needed for City to accept work. Contractor must supply City information on who will be completing material testing. City must approve material testing company before the City will issue a notice to proceed"

**8-01 EROSION CONTROL AND WATER POLLUTION CONTROL**

**8-01.1 Erosion Control and Water Pollution Control**

Best Management Practice (BMP) means physical, structural, and managerial practices that when used singly or in combination prevent or reduce erosion.

**8-01.3(8) Street Cleaning**

Brooming shall include removing all loose aggregate from the sidewalks, ramps and driveways.

**8-01.4 Measurement**

Add the following:

No unit of measurement shall apply to the lump sum price for "Erosion Control".

**8-01.5 Payment**

Add the following:

All costs associated "Erosion Control" as defined under 8-01.1 shall be included in the lump sum price for "Erosion Control".

**9-03.8(2) HMA Test Requirements**

**ESAL'S**
The number of ESAL'S for the design and acceptance of the HMA shall be as follows:

0.3 million to <3 million for CI. ½ in. PG 64-22

**STANDARD PLANS**

**August 6, 2012**

The State of Washington Standard Plans for Road, Bridge and Municipal Construction Manual M21-01, effective August 6, 2012 is made a part of this contract.

## PART IV- CONTRACT DRAWINGS

C1 – 2013 HMA Overlay - East Scott Avenue Site Plan
T-01 – Concrete Curbs
T-07 – Sidewalk Detail
T-14 – Combination Ramp Construction
T-16 – Parallel Ramp
T-18 – Curb Ramp for Limited ROW Areas
T-20 – Standard Landing Cross Sections C-C and D-D
T-21 – Ramp Lip and Detectable Warning Pattern

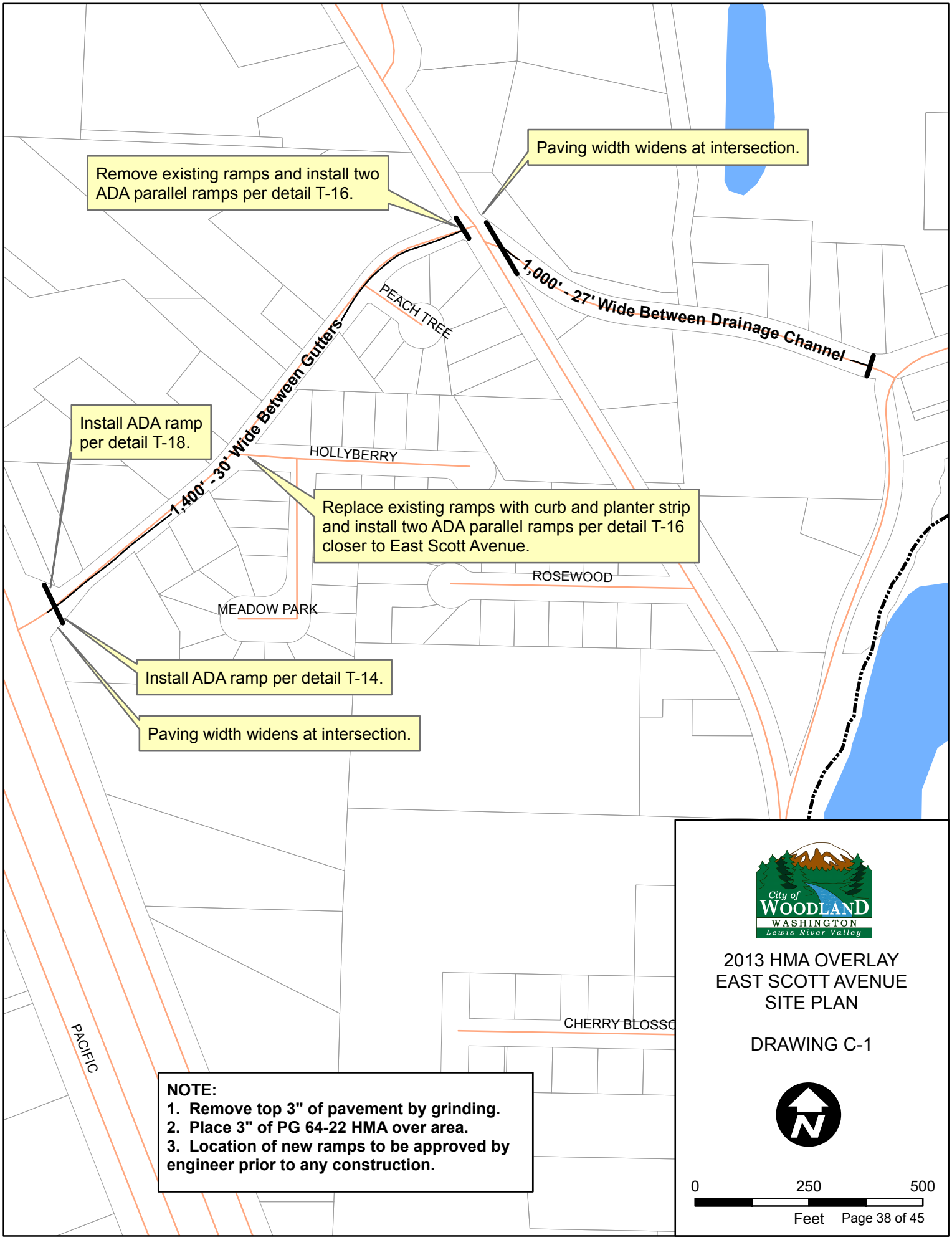


**NOTE:**
1. **Remove top 3" of pavement by grinding.**
2. **Place 3" of PG 64-22 HMA over area.**
3. **Location of new ramps to be approved by engineer prior to any construction.**

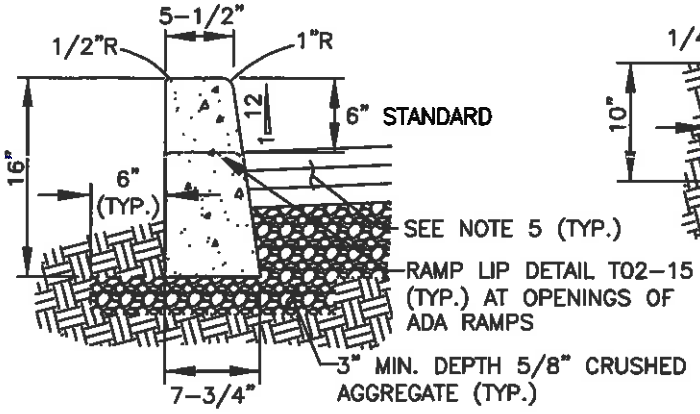


TYPE E-1 CURB

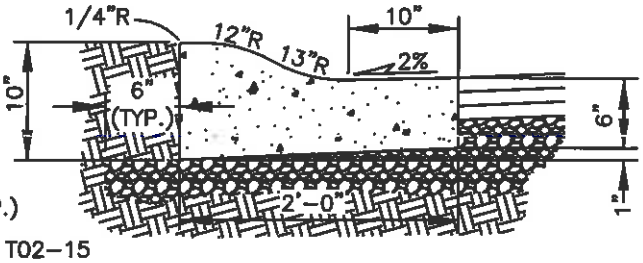


ROLLED CURB AND GUTTER

USE OF ROLLED CURB AND GUTTER PERMITTED ONLY WHEN APPROVED BY PUBLIC WORKS DIRECTOR.

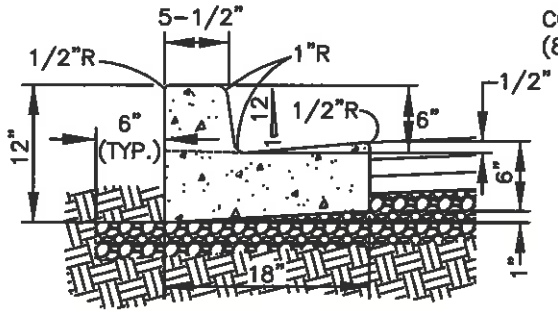


TYPE A-1 CURB AND GUTTER

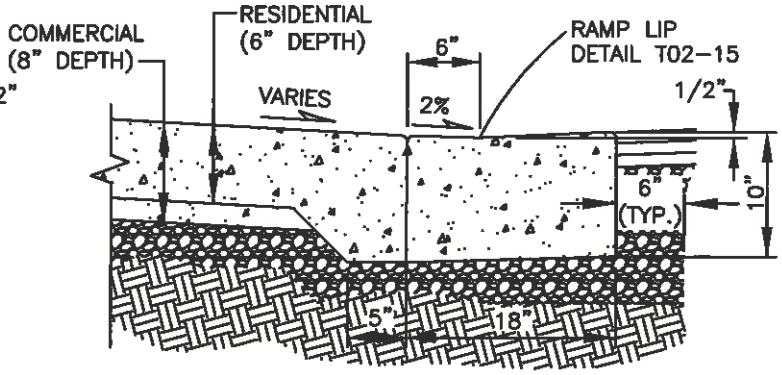


TYPE A-1 CURB AND GUTTER AT DRIVEWAY DROP

NOTES:

1. CONCRETE SHALL BE 3000 PSI MIN. (CL 3000), 3-1/2" SLUMP (MAX.).
2. CURBS ADJACENT TO PAVEMENT OR SIDEWALK SHALL HAVE CONSTRUCTION JOINTS TO MATCH EXISTING PATTERNS. 3/8" EXPANSION JOINTS SHALL BE PLACED ON BOTH SIDES OF CATCH BASINS, AT TOPS OF DRIVEWAYS, ALL CHANGES IN DIRECTION, AND AS DIRECTED BY THE INSPECTOR. CONTRACTION JOINTS TO BE PLACED AT 15' MAXIMUM SPACING.
3. FOR CURB DROPS AT ADA RAMPS, SEE RAMP LIP DETAIL T-21.
4. COMPACT SUBGRADE AND AGGREGATE TO 95% MAXIMUM DRY DENSITY (3" MIN. DEPTH).
5. SEE PAVEMENT RESTORATION/WIDENING AT CURBS DETAIL T-30.
6. CURB TO BE MEDIUM BROOM FINISHED, PARALLEL TO GUTTER LINE.
7. WHERE MATCHING EXISTING CURBS, ALL EXISTING EDGES SHALL BE SAWCUT.
8. WHEN ATTACHED SIDEWALKS ARE USED WITH ROLLED CURB AND GUTTER, THICKENED SIDEWALKS (6" MIN.) SHALL BE CONSTRUCTED UNDER THE SAME CONSTRUCTION CONTRACT.

| City of WOODLAND WASHINGTON PUBLIC WORKS | CONCRETE CURBS | | | | | T-01 |
|---|---|---|---|---|---|---|
| | APPROVED | REVISIONS | DATE | DRAWN | DESIGNED | |
| | Bart Stupp 5/8/13 | | | | | |
| | PUBLIC WORKS DIRECTOR DATE | | | | | |

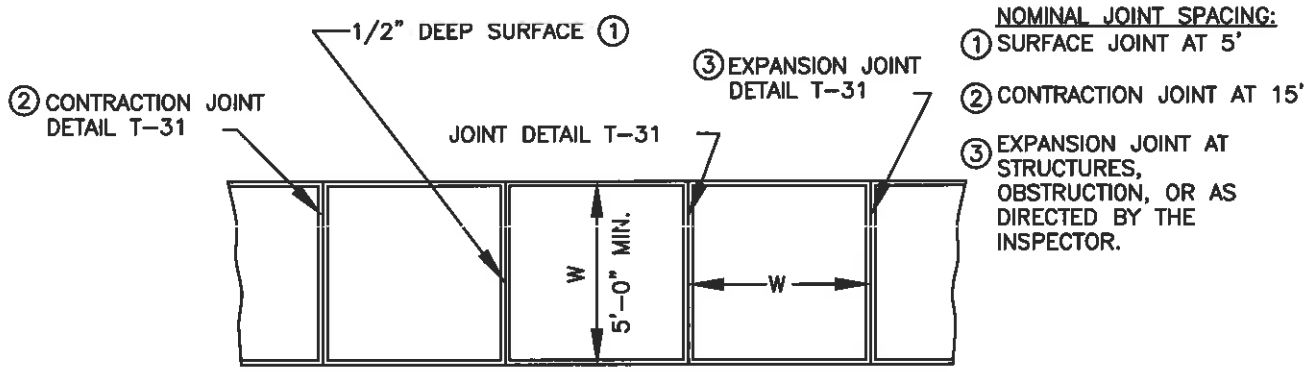


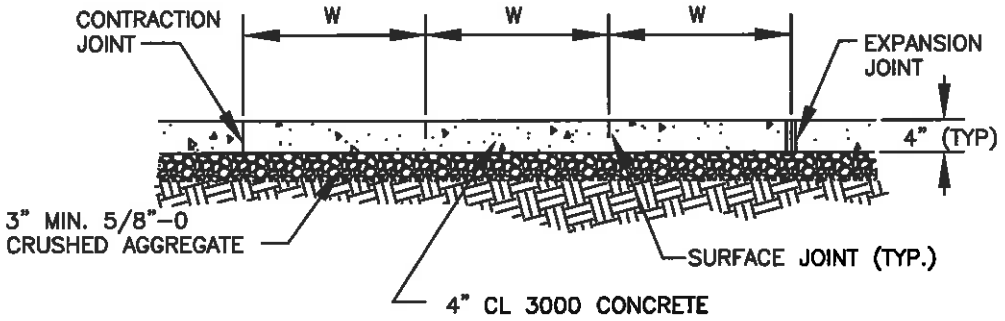


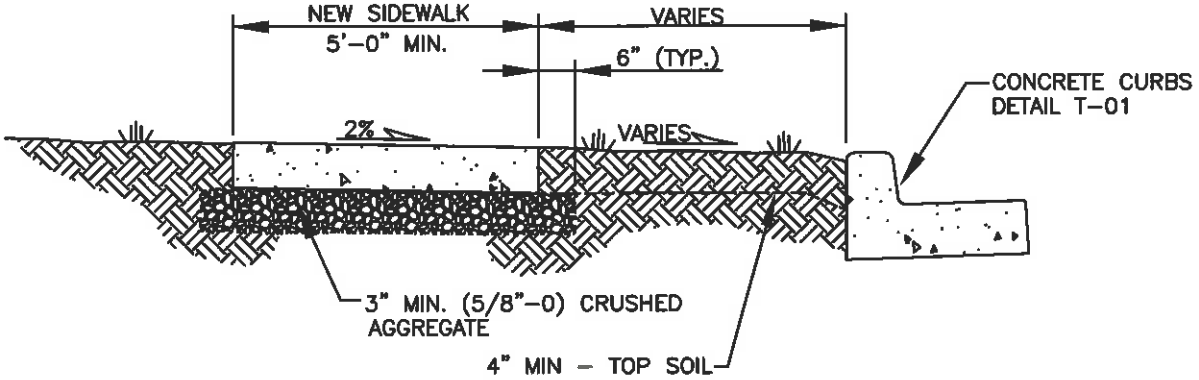


NOTES:

1. CONCRETE SHALL BE 3000 PSI MIN. (CL 3000), 3 1/2" SLUMP (MAX.).
2. COMPACT SUBGRADE AND AGGREGATE TO 95% OF MAXIMUM DRY DENSITY (3" MIN.).
3. FINISH SHALL BE MEDIUM BROOM PERPENDICULAR TO PEDESTRIAN TRAFFIC UNLESS OTHERWISE DIRECTED.
4. MATCH EXISTING BORDER.
5. SEE CONCRETE JOINTS DETAIL T-31 FOR SURFACE, CONTRACTION, AND EXPANSION JOINTS.
6. ALL EXISTING EDGES SHALL BE SAWCUT.
7. CROSS SLOPE OF PLANTER STRIP SHALL BE 2% (TYP.) AND 4:1 (MAX.).

| | | | | | | |
|---|---|---|---|---|---|---|
| City of WOODLAND WASHINGTON PUBLIC WORKS | SIDEWALK DETAIL | | | | | T-07 |
| | APPROVED | REVISIONS | DATE | DRAWN | DESIGNED | |
| | Bart Stepp 5/8/13 | | | | | |
| | PUBLIC WORKS DIRECTOR DATE | | | | | |

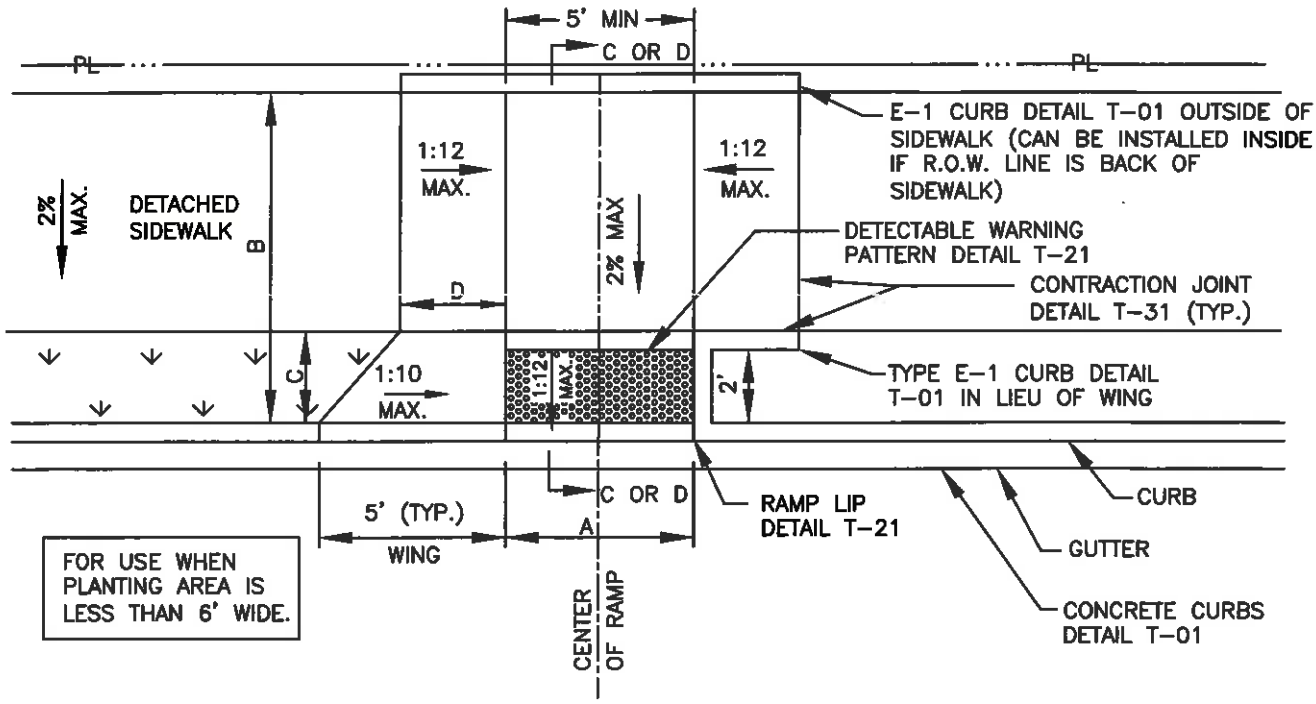


NOTES:

1. EXISTING CURB AND SIDEWALK TO BE SAWCUT AND REMOVED FOR INSTALLATION OF NEW RAMP.
2. RAMP MAY BE USED MID BLOCK OR ON INTERSECTION RADIUS.
3. RAMP TO BE CENTERED IN CROSSWALK.
4. RAMPS TO BE CONSTRUCTED SEPARATELY FROM SIDEWALK.
5. WING DIMENSIONS MAY VARY TO MEET REQUIRED SLOPE.
6. DIMENSION 'C' VARIES.
7. DIMENSION 'A' VARIES DEPENDING UPON RAMP WIDTH, 5' MIN.
8. DIMENSION 'D' VARIES DEPENDING UPON THE SLOPE OF THE SIDEWALK, 2' MIN TO 15' MAX.
9. SEE STANDARD LANDING CROSS SECTIONS DETAIL T-20 FOR SECTIONS C-C AND D-D.

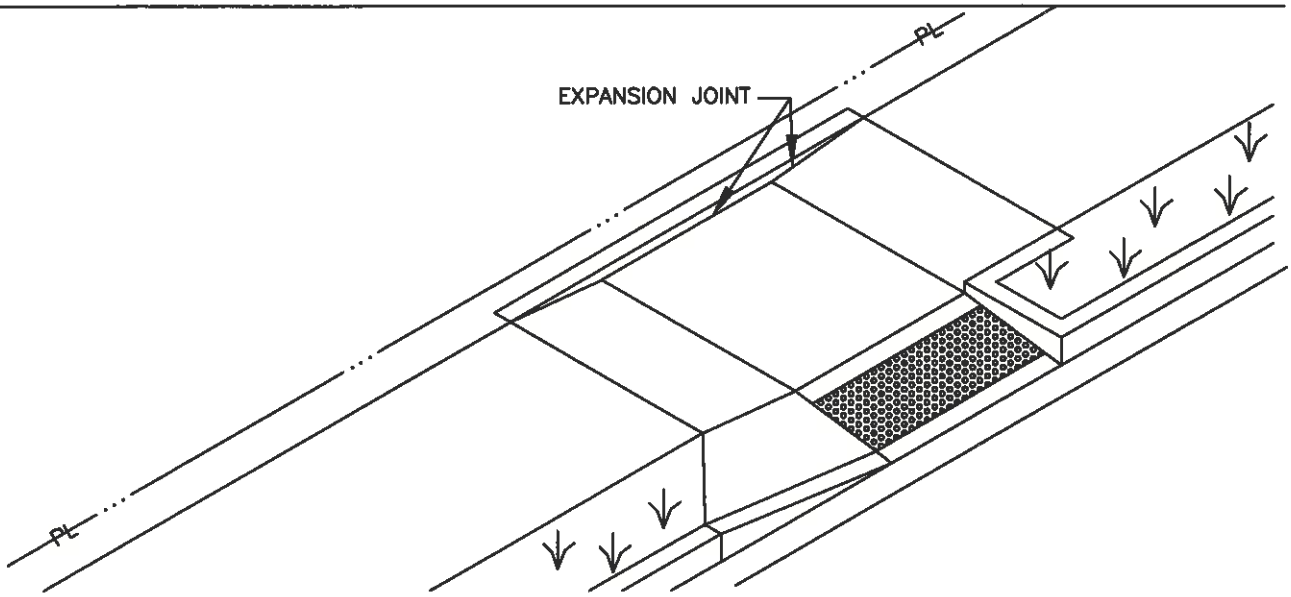


City of WOODLAND WASHINGTON PUBLIC WORKS

COMBINATION RAMP CONSTRUCTION

APPROVED

Bart Stupp 5/8/13

PUBLIC WORKS DIRECTOR DATE

| REVISIONS | DATE | DRAWN | DESIGNED |
|---|---|---|---|
| | | | |
| | | | |
| | | | |

T-14

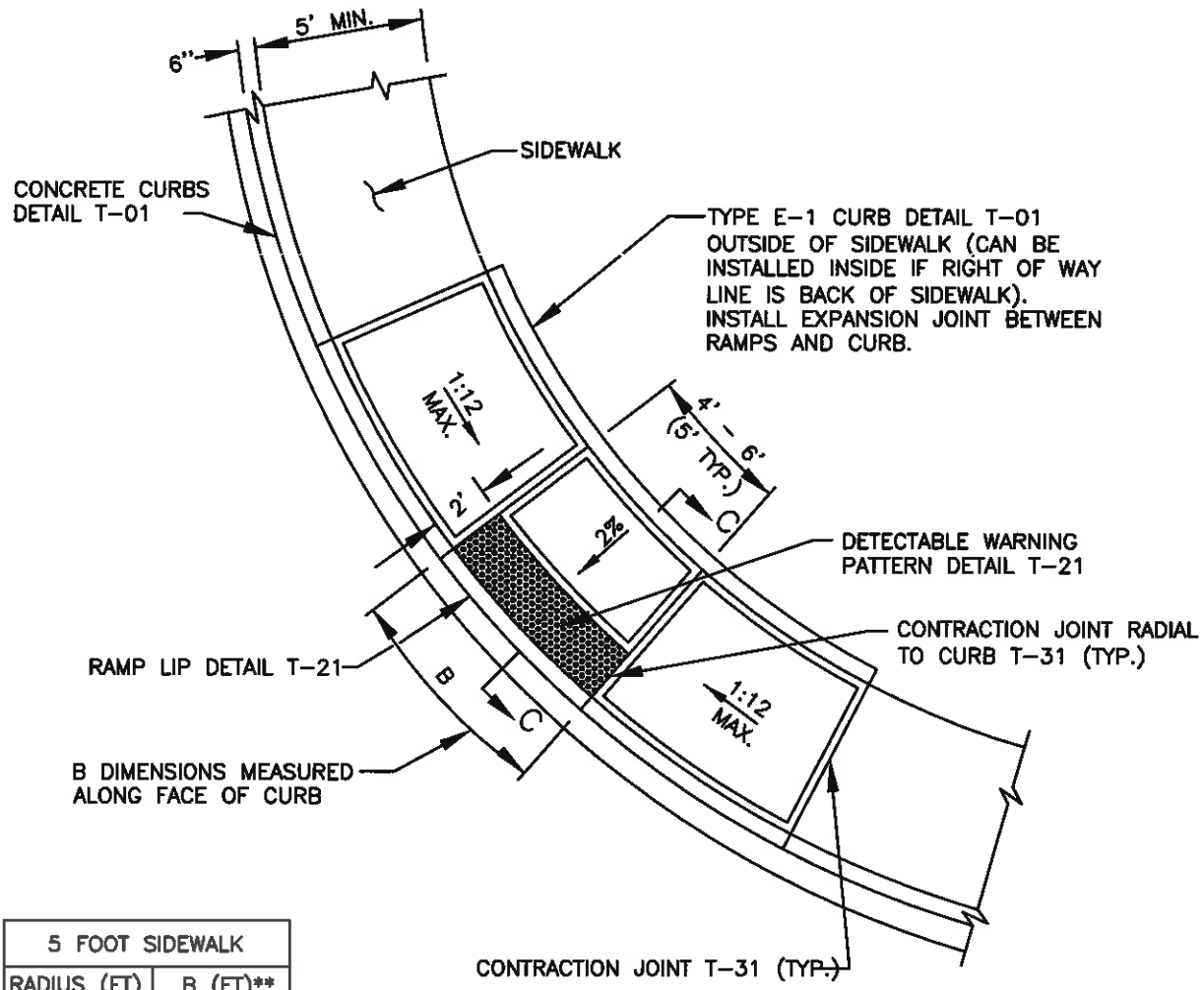


| 5 FOOT SIDEWALK | |
|---|---|
| RADIUS (FT) | B (FT)** |
| 10 * | 11.11 |
| 15 * | 7.89 |
| 20 * | 6.90 |
| 25 | 6.41 |
| 30 | 6.12 |
| 35 | 5.93 |
| 40 | 5.80 |
| 45 | 5.63 |
| ∞ | 5.00 |

* DOUBLE ATTACHED RAMPS NOT ALLOWED

** ASSUMED 5' TOP OF RAMP WIDTH

NOTES:

1. RAMPS SHALL HAVE A MAXIMUM 1:12 SLOPE.
2. EXISTING CURB AND SIDEWALK TO BE SAWCUT AND REMOVED FOR INSTALLATION OF NEW RAMP.
3. RAMP MAY BE USED MID-BLOCK OR ON INTERSECTION RADIUS.
4. RAMP TO BE CENTERED IN CROSSWALK.
5. RAMPS TO BE CONSTRUCTED SEPARATELY FROM SIDEWALK.
6. SEE STANDARD LANDING CROSS SECTIONS – C-C AND D-D DETAIL T-20 FOR SECTION C-C.
7. IF THE AREA BEHIND THE SIDEWALK IS VEGETATED, THE BACK CURB MAY BE REPLACED WITH A SLOPE NO STEEPER THAN 4:1.
8. IF THE MAXIMUM SLOPE OF 1:12 CANNOT BE ACHIEVED DUE TO THE SLOPE OF THE EXISTING SIDEWALK, THE LENGTH OF THE CURB RAMP SHALL NOT BE REQUIRED TO BE LONGER THAN 15 FEET REGARDLESS OF THE RESULTING RAMP SLOPE.

City of WOODLAND WASHINGTON Lower River Valley
PUBLIC WORKS

PARALLEL RAMP

APPROVED

Bart Stepp 5/8/13

PUBLIC WORKS DIRECTOR DATE

| REVISIONS | DATE | DRAWN | DESIGNED |
|---|---|---|---|
| | | | |
| | | | |
| | | | |

T-16

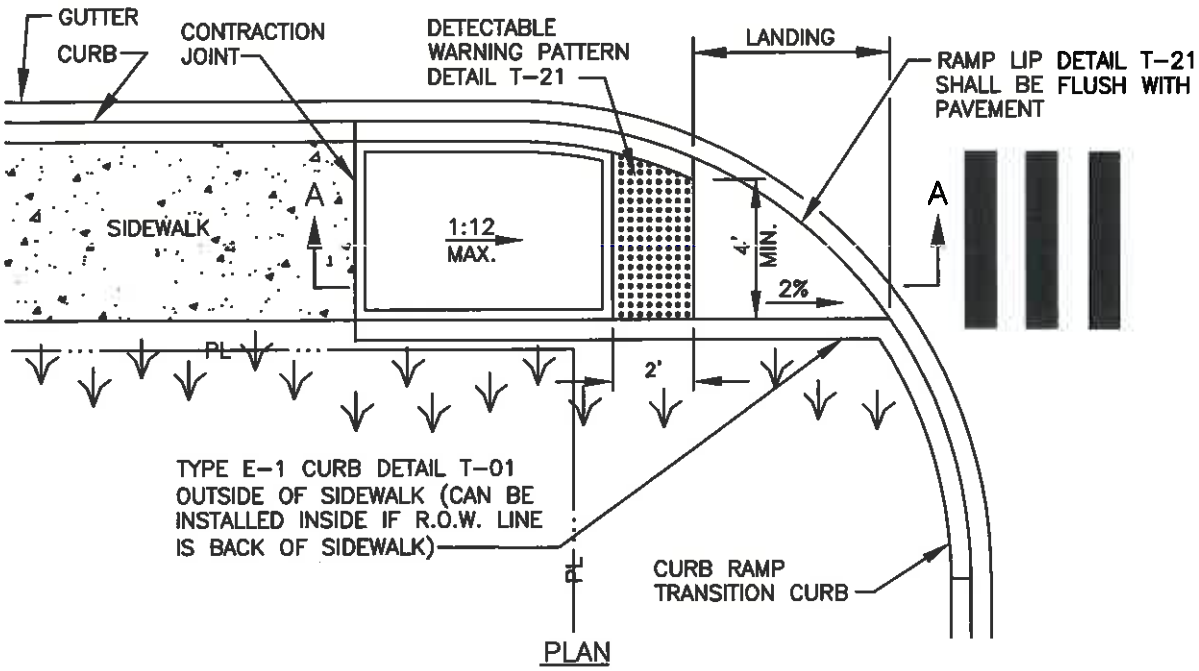


PLAN

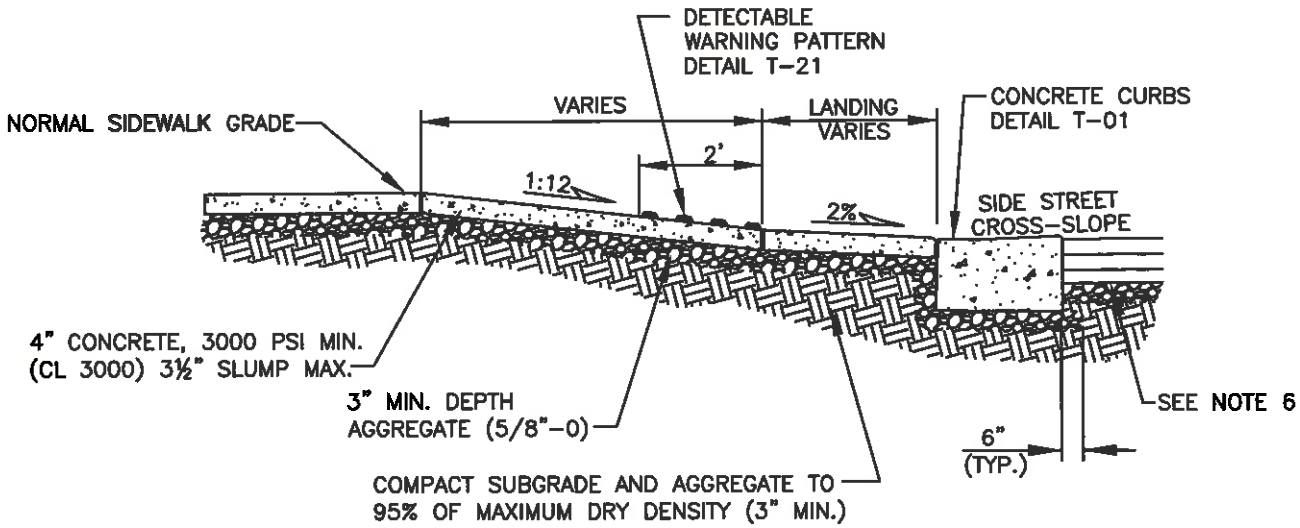


SECTION A-A

NOTES:

1. THIS DETAIL IS TO BE USED ONLY FOR RETROFIT PROJECTS WHEN RIGHT-OF-WAY IS LIMITED TO BACK OF SIDEWALK. SPECIFIC PUBLIC WORKS DIRECTOR APPROVAL IS REQUIRED FOR THE USE OF THIS DETAIL.
2. RAMP TO BE CENTERED IN CROSSWALK.
3. AN UNOBSTRUCTED PATH OF TRAVEL WITH A MINIMUM WIDTH OF 4' SHALL BE MAINTAINED.
4. IF THE MAXIMUM SLOPE OF 1:12 CANNOT BE ACHIEVED DUE TO THE SLOPE OF THE EXISTING SIDEWALK, THE LENGTH OF THE CURB RAMP SHALL NOT BE REQUIRED TO BE LONGER THAN 15 FEET REGARDLESS OF THE RESULTING RAMP SLOPE.
5. SEE PAVEMENT RESTORATION/WIDENING AT CURB DETAIL T-30 WHEN CUTTING EXISTING CURB.

| | | | | | | |
|---|---|---|---|---|---|---|
| City of WOODLAND WASHINGTON PUBLIC WORKS | CURB RAMP FOR LIMITED R.O.W. AREAS | | | | | T-18 |
| | APPROVED | REVISIONS | DATE | DRAWN | DESIGNED | |
| | Bart Stepp 5/8/13 | | | | | |
| | PUBLIC WORKS DIRECTOR DATE | | | | | |

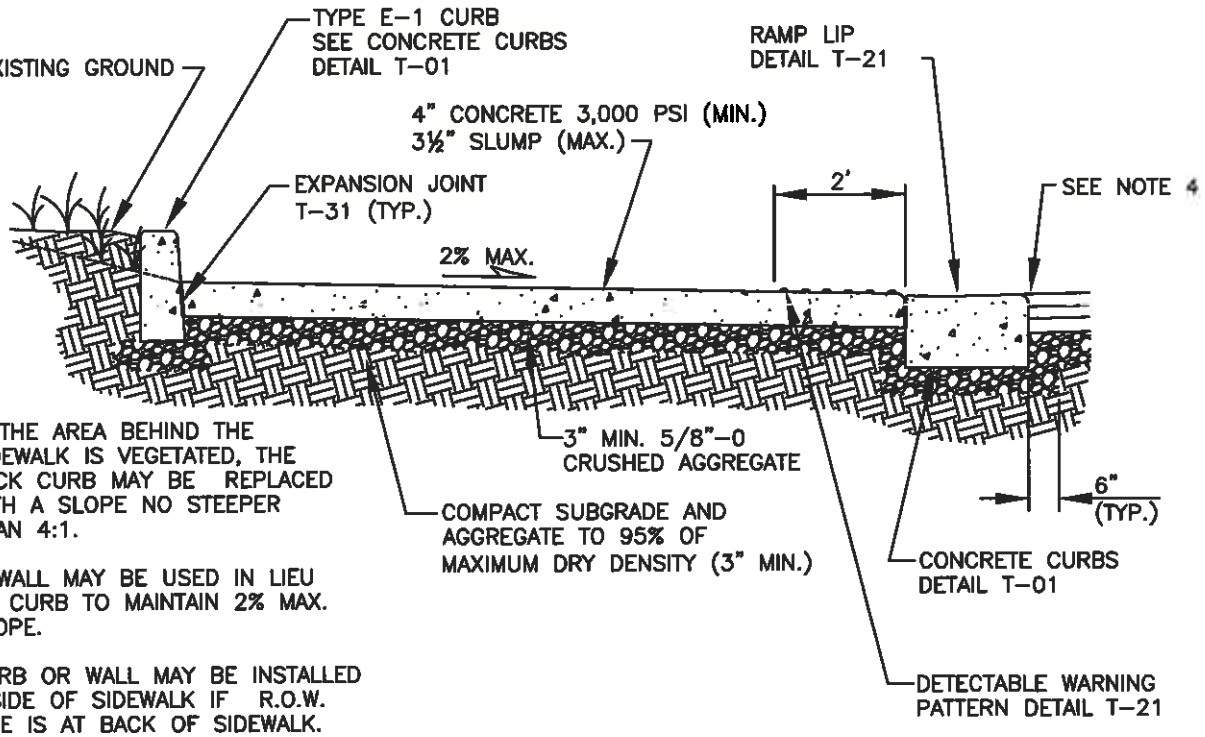


NOTES:

1. IF THE AREA BEHIND THE SIDEWALK IS VEGETATED, THE BACK CURB MAY BE REPLACED WITH A SLOPE NO STEEPER THAN 4:1.
2. A WALL MAY BE USED IN LIEU OF CURB TO MAINTAIN 2% MAX. SLOPE.
3. CURB OR WALL MAY BE INSTALLED INSIDE OF SIDEWALK IF R.O.W. LINE IS AT BACK OF SIDEWALK.
4. SEE PAVEMENT RESTORATION/ WIDENING AT CURBS DETAIL T-30.

SECTION C-C SINGLE-SLOPE LANDING

FOR DETAIL T-16

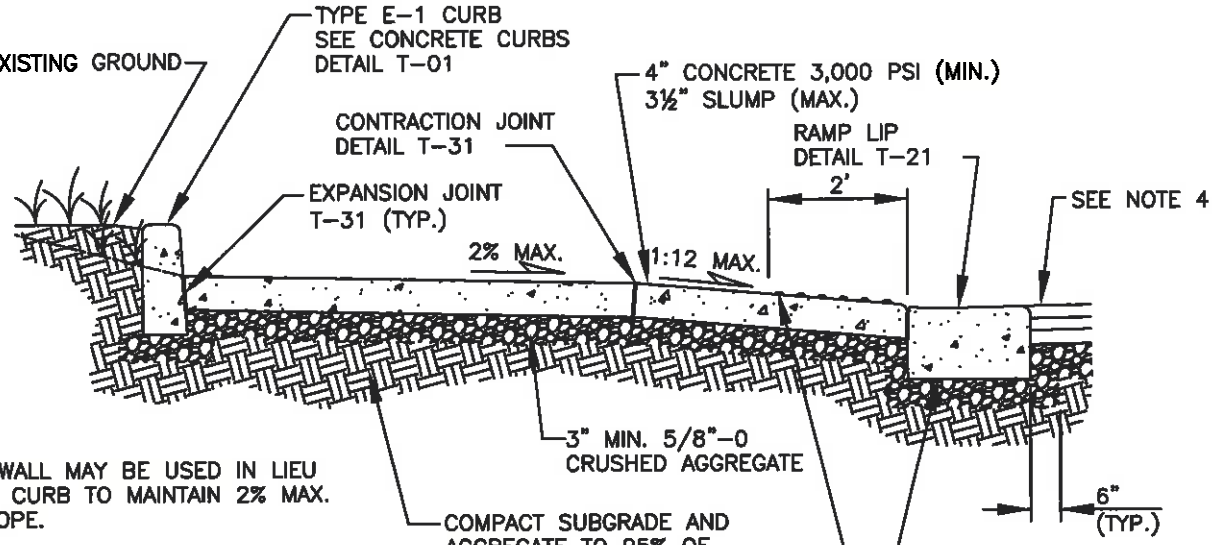


NOTES:

1. A WALL MAY BE USED IN LIEU OF CURB TO MAINTAIN 2% MAX. SLOPE.
2. CURB OR WALL MAY BE INSTALLED INSIDE OF SIDEWALK IF R.O.W. LINE IS AT BACK OF SIDEWALK.
3. SEE PAVEMENT RESTORATION/ WIDENING AT CURBS DETAIL T-30.

SECTION D-D MULTI-SLOPED LANDING

FOR DETAILS T-12, T-13, AND T-14

| | STANDARD LANDING CROSS SECTIONS C-C AND D-D | | | | | |
|---|---|---|---|---|---|---|
| City of WOODLAND WASHINGTON PUBLIC WORKS | APPROVED | REVISIONS | DATE | DRAWN | DESIGNED | T-20 |
| | Bart Stepp 5/8/13 | | | | | |
| | PUBLIC WORKS DIRECTOR DATE | | | | | |

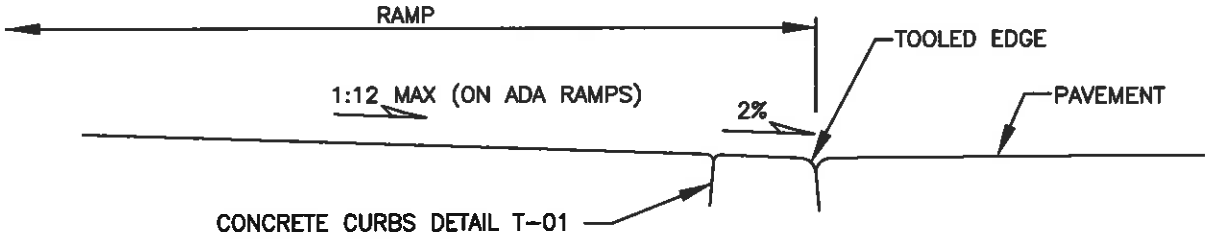


RAMP LIP DETAIL

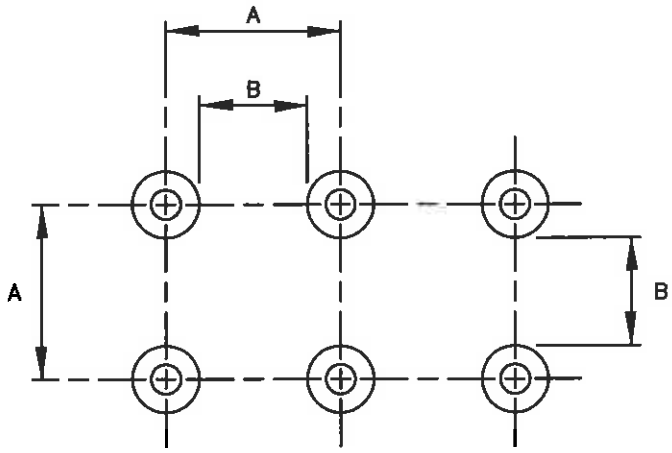


PLAN

| | MIN. | MAX. |
|---|---|---|
| A | 1 5/8" | 2 3/8" |
| B | 5/8" | 1 1/2" |
| C | 7/16" | 3/4" |
| D | 7/8" | 1 7/16" |

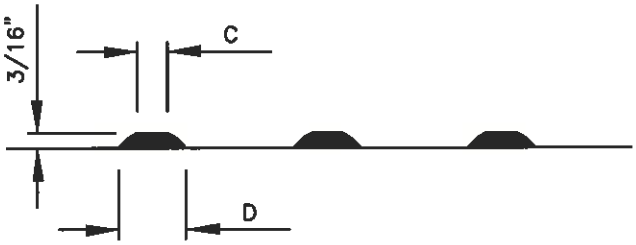


ELEVATION

NOTES:

1. DETECTABLE WARNINGS SHALL BE MANUFACTURED USING THE MATERIALS SPECIFIED ON THE PLAN SHEETS WITH THE DOME DIMENSIONS AND SPACING SHOWN AND INSTALLED PER THE MANUFACTURER'S RECOMMENDED PROCEDURES.
2. DETECTABLE WARNINGS SHALL BE INSET INTO NEW CONCRETE WITH NO AIR TRAPPED UNDERNEATH. GLUED ON OR NAILED DOWN PRODUCTS ARE NOT ACCEPTABLE FOR NEW CONSTRUCTION.
3. SAFETY YELLOW TRUNCATED DOMES ARE REQUIRED UNLESS OTHERWISE APPROVED BY THE PUBLIC WORKS DIRECTOR.

DETECTABLE WARNING PATTERN DETAIL

| | RAMP LIP AND DETECTABLE WARNING PATTERN | | | | | |
|---|---|---|---|---|---|---|
| City of WOODLAND WASHINGTON PUBLIC WORKS | APPROVED | REVISIONS | DATE | DRAWN | DESIGNED | T-21 |
| | Bart Stipp 5/8/13 | | | | | |
| | PUBLIC WORKS DIRECTOR DATE | | | | | |

City of WOODLAND
WASHINGTON
Lewis River Valley

P.O. Box 9
Woodland, WA 98674
www.ci.woodland.wa.us

100 Davidson Avenue
fax: (360) 225-1201

**Police**
(360) 225-6965

230 Davidson Avenue
fax: (360) 225-7336

**Mayor's Office**
**Clerk-Treasurer**
(360) 225-8281

**Building**
(360) 225-7299

**Planning**
(360) 225-1048

300 East Scott Avenue
fax: (360) 225-7467

**Public Works**
(360) 225-7999

**Date:** **May 31, 2013**

**From:** **Bart Stepp, PE, Public Works Director**

**To:** **2013 HMA Overlay – East Scott Avenue Bidder's List**

**Subject:** **Addendum #1 for the 2013 HMA Overlay – East Scott Avenue**

The following changes are made to the plans and specifications:

*Item 1:* Attached with this addendum is the current planholder list for the project.

*Item 2:* The City has marked out the paving limits and ramp locations of the project with white marking paint for contractor's information.

*Item 3:* The north ramp at the intersection of Old Pacific Highway and E. Scott needs to be moved in addition to being replaced. This reduces the quantity of Bid Item Number 9 from 4 to 3 and increases the quantity of Bid Item Number 10 from 2 to 3. Attached with this addendum is an updated bid proposal form reflecting the change in quantities.

*Item 4:* The City owns the property at 300 E. Scott Avenue. The contractor will be allowed to use that space for staging of materials and equipment. There is a large gravel area on the west half of that lot where some of the asphalt grindings could be placed. If the contractor chooses to do that they must receive a grading permit through the City of Woodland Building Department. Application forms are available on the city website, www.ci.woodland.wa.us. A contractor choosing this option must include permitting costs and the costs for spreading and grading the grindings over the lot in Bid Item #8, Planing Bituminous Pavement.

The east half of this lot is currently under construction for a new police station. Grindings will not be allowed to be placed on that site.

*Item 5:* The Contractor must provide documentation that the asphalt grindings will be placed in suitable locations that meet all land use requirements.

If you have any questions please call Bart Stepp at Woodland Public Works at (360) 225 -7999.

Sincerely,

Bart Stepp

Bart Stepp, PE
City of Woodland
Public Works Director

# 2013 HMA Overlay - East Scott Avenue Project  Planholder's List

| Number | Business Name | Address 1 | Address 2 | City | State | Zip | Primary Contact | Primary Phone | Bidding Email(s) | Bidding Fax |
|---|---|---|---|---|---|---|---|---|---|---|
| 1 | iSqFt | 4500 Lake Forest Drive, Suite 502 | | Cincinnati | OH | 45242 | Brianna Knight | 800-364-2059 | BriannaKnight@ISQFT.com | 866-570-8187 |
| 2 | Portland DJC | 921 SW Washington St. | Suite 210 | Portland | OR | 97205 | Sharlene L. Richard | 503-274-0624 | plancenter@djcoregon.com | 503-274-2616 |
| 3 | Contractor Plan Center | 5468 SE International Way | | Milwaukie | OR | 97222 | Brie Kidwell | 503-650-0148 | brie@contractorplancenter.com | 360-650-8273 |
| 4 | Lakeside Industries | PO Box 576/500 Tennant Way | | Longview | WA | 98632 | Jeff Herriford | 360-423-6882 | jeff.herriford@lakesideind.com | 360-423-6882 |
| 5 | Brix Paving | | | | | | Rick Beyer | 503-570-9355 | estimating@brixpaving.com | 503-570-9365 |
| 6 | Salem Contractors Exchange | PO Box 12065 | | Salem | OR | 97309 | Janai Hill | 503-362-7957 | janai@sceonline.org | |
| 7 | Paramount Petroleum | | | | | | Cody Worden | 971-678-3123 | Cworden@ppcla.com | 503-274-9758 |
| 8 | Seattle Daily Journal of Commerce | 83 Columbia Street | | Seattle | WA | 98104 | Laura Heberlein | 206-622-8272 | laura.heberlein@djc.com | 206-622-8416 |
| 9 | Transportation Improvement Board | 505 Union Avenue SE | Suite 350 | Olympia | WA | 98504 | Clint Ritter | 360-586-1151 | ClintR@TIB.wa.gov | |
| | | | | | | | | | | |

**BID PROPOSAL FORM**

TO: City of Woodland
PO Box 9
230 Davidson Ave.
Woodland, Washington 98674

FROM: Bidder _____

Address _____

_____

Telephone _____

The undersigned, as bidder, declares that we have examined all the contract documents and that we will contract with the City of Woodland to do everything necessary to complete the work as outlined on the plans and specifications for the 2013 HMA Overly - East Scott Avenue.
.
We acknowledge that addenda numbers _____ to _____ have been delivered to us and have been examined as part of the contract documents. We agree that the Qualification of Bidder shall form a part of this proposal.

If our BID is accepted, we agree to sign the contract form and to furnish the contract bond and the required evidences of insurance within ten (10) calendar days after receiving written notice of the award of contract.

We further agree, if our BID is accepted and a contract for performance of work is entered into with the City of Woodland, to so plan the work and to prosecute it with such diligence that all of the work shall be completed within the time period stated in the contract. We understand that the City of Woodland reserves the right to reject any or all bids and to determine which proposal is, in the judgment of the City of Woodland, the lowest responsible bid, and which proposal, if any, should be accepted in the best interests of the City of Woodland and that the City of Woodland also reserves the right to waive any informalities in any proposal or bid.

We further state that we have not, either directly or indirectly, entered into any agreement, participated in any collusion, or otherwise taken any action in restraint of free competitive bidding in connection with such contract.

Bidder agrees that the work will be completed within thirty (30) working days after the date when the notice to proceed is received from the City of Woodland.

We propose to perform the work at the prices listed in the following bid schedule(s):

Notes:
(1) See Special Provisions and the Standard Specifications for State sales tax requirements.
(2) The City reserves the right to adjust the scope of this work to match available funds.
(3) The City reserves the right to reject any or all bids.

(4) The table below provides a list of items required to complete the project. It is the contractor's responsibility to complete the project scope to all required standards and specifications.
(5) The City reserves the right to include the Alternative Bid Item as part of the total bid price.

**2013 HMA OVERLAY - EAST SCOTT AVENUE PROJECT BID PROPOSAL:**

| Item No. | Std. Spec. | Description | Estimated Quantity | Units | Unit Price | Total Price |
|---|---|---|---|---|---|---|
| 1. | 1-07 | Spill Prevention, Control and Countermeasure Plan | 1 | LS | | |
| 2. | 1-09 | Mobilization | 1 | LS | | |
| 3. | 1-10 | Traffic Control Supervisor | 1 | LS | | |
| 4. | 1-10 | Temporary Traffic Control | 1 | LS | | |
| 5. | 1-10 | Flaggers and Spotters | 120 | HR | | |
| 6. | 2-01 | Roadside Cleanup | 1 | LS | | |
| 7. | 5-04 | HMA Cl. ½" PG 64-22 (3" Overlay) | 1375 | TN | | |
| 8. | 5-04 | Planing Bituminous Pavement | 8000 | SY | | |
| 9. | 5-04 | Material Testing | 1 | LS | | |
| 10. | 6-02 | Replace existing sidewalk or ramp with new Concrete Sidewalk ADA Ramp | 3 | EA | | |
| 11. | 6-02 | Remove existing sidewalk ramp with sidewalk and place new Concrete ADA ramp in new location | 3 | EA | | |
| 12. | 8-01 | Erosion Control | 1 | LS | | |
| **Grand Total HMA Overlay - East Scott Avenue** | | | | | **$** | |

BIDDER acknowledges receipt of the following ADDENDUM:

| Addendum No. | Addendum Receipt Date | Signed Acknowledgment |
|---|---|---|
| 1 | _____ | _____ |

WASHINGTON STATE AND LOCAL SALES TAX. Sales Tax (7.7%) shall be included in the unit bid prices for the material and supplies used for the project.

BIDDER'S ADDRESS. Notice of Acceptance of this bid or requests for additional information should be addressed to the undersigned at the address stated below.

NON-COLLUSION DECLARATION. I, by signing the proposal, hereby declare, under penalty of perjury under the laws of the United States that the following statements are true and correct:

1. That the undersigned person(s), firm, association or corporation has (have) not, either directly or indirectly, entered into any agreement, participated in any collusion, or otherwise taken any action in restraint of free competitive bidding in connection with the project or which this proposal is submitted.

2. That by signing the signature page of this proposal, I am deemed to have signed and have agreed to the provisions of this declaration.

NOTES:

1. This proposal form is not transferable and any alteration of the firm's name entered hereon without prior permission from the Public Works Director will be cause for considering the proposal irregular and subsequent rejection of the bid.

SIGNATURE

Date: _____ _____

Proper Name of Bidder

Contractor's License No.: _____

By: _____

Company Name

_____

Address

_____

City State Zip