CONTRACT DOCUMENTS
FOR THE CONSTRUCTION OF

2013 Westside Sewer Project

FOR THE

CITY OF WOODLAND

March 13, 2013

WOODLAND JOB NUMBER: CAP 13-02

Prepared By:

Bart Stepp, PE
Public Works Director
City of Woodland
PO Box 9; 300 E. Scott Ave.
Woodland, WA 98674
(360) 225-7999

TABLE OF CONTENTS

2013 Westside Sewer Project

CITY OF WOODLAND, WASHINGTON

INVITATION TO BID

PART I – BIDDING DOCUMENTS

- Instructions to Bidders
- Bid Proposal Form
- Bid Bond
- Bidder Qualifications

PART II – CONTRACT FORMS

- Agreement
- Payment Bond
- Performance Bond
- Notice of Award
- Notice to Proceed
- Change Order

PART III – CONDITIONS OF THE CONTRACT

- City of Woodland Special Provisions

PART IV – CONTRACT DRAWINGS

- 2013 Westside Sewer Project Site Map
- City of Woodland Standard Sewer Drawings
  - S-01 – Construction Specifications – Sanitary Sewer
  - S-03 – Flexible Pipe Bedding
  - S-04 – Trench: Restore, Backfill, Bedding, & Surfacing
  - S-05 – Service Lateral Connections
  - S-08 – Standard Precast Manhole
  - S-11 – Manhole Connection
  - S-16 – Sanitary Stub Marker
  - S-17 – Sewer Cleanout

INVITATION TO BID
CITY OF WOODLAND 2013 WESTSIDE SEWER PROJECT

Sealed proposals for furnishing all materials, labor, and equipment for the following described work will be received by the City of Woodland at the City Hall Annex - 230 Davidson Avenue - Woodland, WA 98674 until April 4, 2013 at 2:00 P.M. If forwarded by mail, the sealed envelope containing the proposal shall be enclosed inside another envelope addressed to the City of Woodland - ATTN: Bid Proposal - P.O. Box 9 - Woodland, Washington 98674. Bids will not be accepted via facsimile or electronic mail. Each proposal shall be completely sealed in a package addressed as required. Sealed bids will be publicly opened and read aloud at 2:00 P.M. on April 4, 2013 at the City Annex - 230 Davidson Avenue - Woodland, WA 98674. A contract will be awarded or all bids rejected within 45 days after the bid opening.

PROJECT NAME: 2013 Westside Sewer Project

PROJECT DESCRIPTION: Project consists of collection system improvements consisting of relining existing sewer mains with cured-in-place-pipe (CIPP). Sections of sewer main that cannot be relined will be replaced with new 8" PVC Sewer Main. Sewer mains to be relined or replaced will be located in the older part of Woodland west of Atlantic Avenue and south of West Scott Avenue. Work generally includes 2,400 feet of 10" concrete main, 10,400 feet of 8" concrete main, and 4,700 feet of 8" AC/transite main. There is another 2,900 feet of 8" main that the City is unsure whether those lines are concrete, transite, or PVC. The mains that are concrete or transite will be CIPP lined. The unknown lines that are PVC will be cleaned and inspected but not lined. Main sections that cannot be lined due to defects or bends will be replaced with 8" or 10" PVC Sewer Main to match the existing sewer main on either side of the defect and the rest of the main will be lined.

The issuing office for Contract Documents is City of Woodland Public Works, PO Box 9; 300 E. Scott Ave., Woodland, WA 98674, (360) 225-7999. Plans will be available starting March 14, 2013. There will be a $20 fee for hardcopies of contract documents. Electronic versions of contract documents will be e-mailed free. A pre-bid conference will not be held, but the Public Works Director is available to visit the area with the contractor on an appointment basis. To check plan availability dates and/or plan holder's list please call the above number for information.

Technical inquiries regarding the project should be directed to Bart Stepp, Public Works Director, at City of Woodland, P.O. Box 9; 300 E. Scott Ave., Woodland, WA 98674, (360) 225-7999. All proposals must be submitted on the regular form furnished with the specifications. Work shall begin within thirty (30) calendar days of signing the agreement and completed within sixty (60) working days after receipt of Notice to Proceed.

State Sales Taxes -- the provisions of Section 1-07.2(2) - Rule 170 – apply to this project. The Contractor shall include Washington State Retail Sales Taxes on the full contract price.

All construction and material, unless otherwise specified, shall be in accordance with the 2012 Standard Specifications and Standard Plans for Road, Bridge, and Municipal Construction as prepared by the Washington State Department of Transportation and as amended under Amendments to the Standard Specifications, and the American Public Works Association, and the City of Woodland Engineering Standards for Construction.

The CITY OF WOODLAND reserves the right to cancel this request or reject any and all bids received or to waive any minor formalities of this call if in the judgment of the City Council the best interest of the City would be served.

PART I- BIDDING DOCUMENTS

INSTRUCTIONS TO BIDDERS

1. Intent of Plans and Specifications

It is the intention of these specifications to provide for careful, thorough, and workmanlike construction procedures in the installation of materials and equipment and in the manufacture and delivery of such materials and equipment. The bidder to whom the contract is awarded shall furnish all the material and labor necessary to complete said contract in accordance with all of its terms and conditions.

The plans and specifications shall be considered and used together. Anything appearing as a requirement of either shall be accepted as applicable to both even though not so stated therein or shown. The Engineer may furnish supplemental plans and specifications to define more clearly any requirement of the original documents; these shall be accepted by the Contractor as of the same force and effect as though they had been included among the listed drawings and in case of any conflict between the listed and the supplemental drawings, the latter shall govern. The Contractor shall not be entitled to extra payment because of his compliance with the requirements of such supplemental drawings unless they contain new requirements involving costs, which clearly could not have been anticipated by an experienced contractor in his examination of the original listed drawings or could not reasonably be inferred there from the requirements of the contract.

All specifications and notes appearing on the plans shall have the same force and effect as though they were repeated herein and by this reference are incorporated herein.

2. Examination of the Contract Documents

Each bidder shall thoroughly examine and be familiar with legal and procedural documents, general conditions, special provisions, specifications, drawings, and addenda (if any). The submission of a proposal shall constitute an acknowledgment that the bidder has thoroughly examined and is familiar with the contract documents. The failure or neglect of a bidder to receive or examine any of the contract documents shall in no way relieve him from any obligations with respect to his proposal or to the contract. No claim for additional compensation will be allowed which is based upon a lack of knowledge of any contract document, and the Owner will in no case be responsible for any loss or for unanticipated costs that may be suffered by the Contractor as a result of conditions pertaining to the work.

3. Examination of Site and Conditions

Before making a proposal, the bidder shall examine the site of the work and ascertain for himself all the physical conditions in relation thereto. Failure to take this precaution shall not release him from his obligation as implied by the proposal he submits nor excuse him from performing the work in strict accordance with the requirements of the contract documents.

No statement made by any officer, agent, or employee of the Owner pertaining to the site of the work or the conditions under which the work must be performed will be binding on the Owner.

4. Inclement Weather

The City of Woodland is subject to inclement weather through the winter and spring months. Severe rain and windstorms may occur in addition to snow and ice. The Contractor should be aware of the potential for inclement weather and plan the project accordingly.

5. Addenda and Interpretations of Documents

No interpretation of meaning of the plans, specifications, or other pre-bid documents will be made to any bidder orally. Every request for such interpretation shall be submitted in writing, addressed to City of Woodland, and to be given consideration, shall be received at least five working days prior to date fixed for opening bids. Any and all such interpretations and any supplemental instructions will be in the form of written addenda to the specifications, which, if issued, will be mailed, faxed, or otherwise delivered to each prospective bidder. Failure of any bidder to receive any such addendum shall not relieve such bidder from any obligation under his bid as submitted. All addenda so issued shall become a part of the contract documents. Where changes to plans, specifications or both or supplemental information of significant importance, additional bid time will be provided.

6. Preparation of Proposal

Bids must be submitted by filling in with ink (or typing), on the Form headed "Bid Proposal," each and every blank on each bid schedule. If the bidder is required to provide a special form appropriate to the nature of his bid, then such form shall be complete in all respects as required by the specifications if it is to merit consideration by the Owner.

All bid prices must be equal to the Bidders estimated cost to perform the work. Prices, which are weighted and disproportionate to the actual cost, as may be compared to other Bidders and evaluation by the Engineer, may be considered non-responsive and their bid rejected. If the proposal is made by a partnership, it should contain the name of each partner and should be signed in the firm name, followed by the signature of partner or that of a person duly authorized to act for and on behalf of such partnership. If made by a corporation, the proposal should be signed with the name of the corporation and the state in which incorporated, followed by the written signature of the qualified officer and the designation of the office he holds in the corporation. The address of the person, firm, or corporation in whose behalf the proposal is submitted shall be given. The bidder shall comply with all other specific requirements of the proposal form.

7. Alteration of Documents Prohibited

Except as may be provided otherwise herein, proposals which are incomplete, are conditioned in any way which the plans or specifications do not authorize, contain unverified erasures or alterations, include items which are not named in the proposal form or which are unlawful, may be rejected as non-responsive.

8. Submission of Proposal

Each proposal shall be sealed in a package addressed as required by the Invitation to Bid, marked with the name of the bidder and the title of the project, and must be delivered to the Woodland City Hall Annex, 230 Davidson Avenue, at or before 2:00 P.M. on April 4, 2013. If forwarded by mail, the sealed envelope containing the proposal shall be enclosed in another envelope addressed to the City of Woodland - Attn: Bid Proposal - P.O. Box 9 - Woodland, WA 98674.

9. Modification of Proposal

Change in a proposal already delivered will be permitted only if a request for the privilege of making such modification is made in writing signed by the bidder and the specific modification itself is stated prior to the bid opening on April 4, 2013.

10. Substitutions

Approval of materials to be used on the project and possible substitutions thereof shall not be addressed during the bidding process. Materials shall meet the specifications and the bids shall be based on specified items.

11. Withdrawal of Proposal

A proposal may be withdrawn at any time prior to bid opening upon written authorization by the proposer.

12. Opening Bids

All bids will be opened at 2:00 p.m. on April 4, 2013, at the City Hall Annex - 230 Davidson Avenue - Woodland, WA 98674. All bid proposals received prior to the scheduled closing time and which are not withdrawn as above provided, will be publicly opened and read aloud even though there may be irregularities or informalities therein, except that any form required as part of the proposal (see Bidder's Checklist below) which is not signed, said proposal will not be read and consequently, will be rejected without consideration.

13. Award of Contract

The owner will make award determination on April 15, 2013.

14. Basis of Award

If the owner awards the contract, the award will be given to the lowest responsive, responsible, qualified Bidder submitting the lowest Bid Proposal acceptable to the Owner.

15. Tied Bids

Tied bids will be resolved per the procedure in the 2012 Standard Specifications and Standard Plans for Road, Bridge, and Municipal Construction as prepared by the Washington State Department of Transportation.

16. Rejection of Bids

The Owner reserves the right before or after opening to reject any or all bids or to waive any informality therein if it is believed that the best interest of the Owner will be served thereby.

17. Bidder's Risk

The submission of bid shall constitute an acknowledgment that the bidder has thoroughly examined and is familiar with the contract documents, and has reviewed and inspected all applicable statutes, regulations, ordinances, and resolutions dealing with or related to the service to be provided herein. The failure or neglect of a bidder to examine such documents, statutes, regulations, ordinances or resolutions shall in no way relieve the bidder from any obligations with respect to the bidder's bid or to the contract. No claim for additional compensation will be allowed which is based upon a lack of knowledge of any contract documents, statutes, regulations, ordinances, or resolutions.

18. Employment Security Department Certificate of Coverage

Contractors must supply with their bid package a certificate of coverage from the Employment Security Department that states they are eligible to bid on this project. To obtain a certificate of coverage go to www.esd.wa.gov/uitax/public-works.php and click on "Bid Letter" link located in the answer to the second question on that webpage.

19. E-Verify Affidavit

The City of Woodland participates in **E-Verify**. E-Verify is an electronic program run by Homeland Security that is designed to verify the documentation of job applicants. The contractor awarded this project must sign and submit an Affidavit of Compliance with E-Verify before a notice to proceed is issued.

20. Woodland Business License

The contractor awarded the project must obtain a City of Woodland business license before the City will issue a notice to proceed. For information on business licenses, call (360) 225-8281. All subcontractors that work on the project must obtain a business license before the City will pay for work completed by the subcontractor.

21. Wage Law Intents and Affidavits

If awarded the project, the contractor and each subcontractor shall complete or have on file a current "Statement of Intent to Pay Prevailing Wages" (Form L&I Number F700-029-000) before payment will be made for work performed. An "Affidavit of Wages Paid" (Form L&I Number F700-007-000) shall be required upon final acceptance of the public works project by the City. These forms are available from Washington State Department of Labor & Industries and can be filed electronically at:

http://www.lni.wa.gov/TradesLicensing/PrevWage/IntentAffidavits/File/default.asp

The applicable prevailing wages for this project have an effective date of **April 4, 2013** and are available electronically from the Washington State Department of Labor & Industries and can be found at:

https://fortress.wa.gov/lni/wagelookup/prvWagelookup.aspx

22. Bidder Requirement

By signing the Bid Proposal Form, the contractor declares that before preparing their bid, they read carefully the specifications and requirements for bidders and that their bid is made with the full knowledge of the kind, quality and quantity of services and equipment to be furnished, and their said bid is as stated on these pages.

23. Bidder's Checklist

Bidder shall complete the following forms and shall submit them with the Bid Proposal:

Bid Proposal Form
Bid Bond
Bidder Qualifications
ESD Certificate of Coverage Letter

BID PROPOSAL FORM

TO: City of Woodland
230 Davidson Ave.
Woodland, Washington 98674

FROM: Bidder _____

Address _____

_____

Telephone _____

The undersigned, as bidder, declares that we have examined all of the contract documents and that we will contract with the City of Woodland to do everything necessary to complete the work as outlined on the plans and specifications for the 2013 Westside Sewer Project.
.
We acknowledge that addenda numbers _____ to _____ have been delivered to us and have been examined as part of the contract documents. We agree that the Bidder Qualifications form shall be a part of this proposal.

If our BID is accepted, we agree to sign the contract form and the required evidences of insurance within ten (10) calendar days after receiving written notice of the award of contract.

We further agree, if our BID is accepted and a contract for performance of work is entered into with the City of Woodland, to so plan the work and to prosecute it with such diligence that all of the work shall be completed within the time period stated in the contract. We understand that the City of Woodland reserves the right to reject any or all bids and to determine which proposal is, in the judgment of the City of Woodland, the lowest responsible bid, and which proposal, if any, should be accepted in the best interests of the City of Woodland and that the City of Woodland also reserves the right to waive any informalities in any proposal or bid.

We further state that we have not, either directly or indirectly, entered into any agreement, participated in any collusion, or otherwise taken any action in restraint of free competitive bidding in connection with such contract.

Bidder agrees that the work will be completed within sixty (60) working days after the date when the bidder commences work.

We propose to perform the work at the prices listed in the following bid schedule(s):

Notes:

(1) See Special Provisions and the Standard Specifications for State sales tax requirements.
(2) The City reserves the right to adjust the scope of this work to match available funds.
(3) The City reserves the right to reject any or all bids.
(4) The table below provides a list of items required to complete the project. It is the contractor's responsibility to complete the project scope to all required standards and specifications.

BASE BID SCHEDULE

Item No.	Std. Spec.	Description	Est. Quantity	Units	Unit Price	Total Price
1.	1-07	Spill Prevention, Control and Countermeasure Plan	1	LS		
2.	1-09	Mobilization	1	LS		
3.	1-10	Traffic Control Supervisor	1	LS		
4.	1-10	Other Temporary Traffic Control	1	LS		
5.	2-01	Roadside Cleanup	1	LS		
6.	SPEC.	8" Concrete Pipe – 8” x 6-mm CIPP	10,400	LF		
7.	SPEC.	8" Transite Pipe – 8” x 6-mm CIPP	4,700	LF		
8.	SPEC.	8" Concrete/Transite/PVC Pipe – 8” x 6-mm CIPP	2,914	LF		
9.	SPEC.	8” PVC Pipe Cleaned and inspected but not CIPP lined.	1	LF		
10.	SPEC.	10" Concrete Pipe – 10” x 6-mm CIPP	2,418	LF		
11.	SPEC.	Reinstate Service Lines	350	EA		
12.	SPEC.	Point Repair: Replace 10’ section of 8” sewer main that is 9’ deep, including backfill and repaving of trench	1	EA		
13.	SPEC.	Point Repair: Replace 10’ section of 10” sewer main that is 9’ deep, including backfill and repaving of trench	1	EA		
14.	SPEC.	Severe Defect Grouting: Cost to grout 10’ of sewer main that has severe defects but does not require replacement.	1	EA		
				Subtotal of Work		
				Sales Tax @ 7.7%		
				Grand Total 2013 Westside Sewer Project (Subtotal + Sales Tax)		

BIDDER acknowledges receipt of the following ADDENDUM:

Addendum No.	Addendum Receipt Date	Signed Acknowledgment
1	_____	_____

WASHINGTON STATE AND LOCAL SALES TAX. Sales Tax (7.7%) shall be added to full contract price.

BIDDER'S ADDRESS. Notice of Acceptance of this bid or requests for additional information should be addressed to the undersigned at the address stated below.

NON-COLLUSION DECLARATION. I, by signing the proposal, hereby declare, under penalty of perjury under the laws of the United States that the following statements are true and correct:

1. That the undersigned person(s), firm, association or corporation has (have) not, either directly or indirectly, entered into any agreement, participated in any collusion, or otherwise taken any action in restraint of free competitive bidding in connection with the project or which this proposal is submitted.

2. That by signing the signature page of this proposal, I am deemed to have signed and have agreed to the provisions of this declaration.

NOTES:

1. This proposal form is not transferable and any alteration of the firm's name entered hereon without prior permission from the Public Works Director will be cause for considering the proposal irregular and subsequent rejection of the bid.

SIGNATURE

Date: _____ _____

Proper Name of Bidder

Contractor's License No.: _____

By:_____

_____

Address

_____

City State Zip

BID BOND

KNOW ALL MEN BY THESE PRESENTS, that we, the undersigned, _____ _____ as Principal, and _____ as Surety, are hereby held and firmly bound unto _____ as Owner, in the penal sum of: _____ for the payment of which, well and truly to be made, we hereby jointly and severally bind ourselves, successors and assigns.

SIGNED, this _____ day of _____, 2013.

The condition of the above obligation is such that whereas the Principal has submitted to: _____ a certain Bid attached hereto and hereby made a part hereof to enter into a contract in writing, for the _____.

NOW, THEREFORE,

a) If said Bid shall be rejected, or

b) If said Bid shall be accepted and the Principal shall execute and deliver a contract in the form of contract attached hereto (properly completed in accordance with said Bid) and shall furnish a bond for his faithful performance of said contract, and for the payment of all persons performing labor or furnishing materials in connection therewith, and shall in all other respects perform the agreement created by the acceptance of said Bid, then this obligation shall be void, otherwise the same shall remain in force and effect; it being expressly understood and agreed that the liability of the Surety for any and all claims hereunder shall, in no event, exceed the penal amount of this obligation as herein stated.

The Surety, for value received, hereby stipulates and agrees that the obligations of said Surety and its bond shall be in no way impaired or affected by an extension of the time within which the Owner may accept such Bid; and said Surety does hereby waive notice of any such extension.

I**N WITNESS WHEREOF**, the Principal and the Surety have hereunto set their hands and seals, and such of them as are corporations have caused their corporate seals to be hereto affixed and these presents to be signed by their proper officers, the day and year first set forth above.

_____ (L.S.)
Principal Title

_____
Surety

By: _____

IMPORTANT: Surety Companies executing bonds must appear on the Treasury Department's most current list (Circular 570 as amended) and be authorized to transact business in the state where the project is located.

BIDDER QUALIFICATIONS

Project: 2013 Westside Sewer Project

If the above contract is awarded to our company, the following persons will be authorized to sign change orders, progress payments, and similar documents for the company: (names and positions)

_____

_____

The contractor's superintendent at the job site per Article 1-05.13 of the Standard Specifications will be (give full name):_____

The last three projects completed or substantially completed by our company involving similar construction work are as follows:

1. Project Name: _____

   Dollar amount of Contract: $_____

   Owner: _____

   Owner's Representative: _____ Phone No.: _____

   Contractor's Superintendent on this Project: _____

   Brief Description of Project Scope: _____

   _____

   _____

2. Project Name: _____

   Dollar amount of Contract: $_____

   Owner: _____

   Owner's Representative: _____ Phone No.: _____

   Contractor's Superintendent on this Project: _____

   Brief Description of Project Scope: _____

   _____

   _____

3. Project Name: _____

Dollar amount of Contract: $_____

Owner: _____

Owner's Representative: _____ Phone No.: _____

Contractor's Superintendent on this Project: _____

Brief Description of Project Scope: _____

_____

_____

Name/Title of Person Completing Form: _____

Signature: _____ Date: _____

Phone No.: _____

PART II- CONTRACT FORMS

AGREEMENT

THIS AGREEMENT, made this _____ day of _____ by and between the City of Woodland, Washington, hereinafter called "Owner," and of _____ _____, doing business as (an individual) or (a partnership) or (a corporation), hereinafter called "Contractor."

WITNESSETH: that for and in consideration of the payments and agreements hereafter mentioned:

The Contractor will furnish all of the material, supplies, tools, equipment, labor, and other services necessary for the completion of the project described herein.

PROJECT DESCRIPTION: Project consists of collection system improvements consisting of relining existing sewer mains with cured-in-place-pipe (CIPP). Sections of sewer main that cannot be relined will be replaced with new 8" PVC Sewer Main. Sewer mains to be relined or replaced will be located in the older part of Woodland west of Atlantic Avenue and south of West Scott Avenue. Work generally includes 2,400 feet of 10" concrete main, 10,400 feet of 8" concrete main, and 4,700 feet of 8" AC/transite main. There is another 2,900 feet of 8" main that the City is unsure whether those lines are concrete, transite, or PVC. The mains that are concrete or transite will be CIPP lined. The unknown lines that are PVC will be cleaned and inspected but not lined. Main sections that cannot be lined due to defects or bends will be replaced with 8" or 10" PVC Sewer Main to match the existing sewer main on either side of the defect and the rest of the main will be lined.

The Contractor will commence the work required by the Contract Documents within thirty (30) calendar days of signing the agreement. All work required by the Contract Documents will be completed within sixty (60) working days unless the period for completion is extended otherwise by the Contract Documents.

The Contractor agrees to perform all of the work described in the Contract Documents and comply with the terms therein for the total price of _____ _____.

The term "Contract Documents" means and includes the following:

Invitation to Bid	Performance Bond
Instructions to Bidders	City of Woodland Special Provisions
Bid Proposal Form	Contract Bid Items
Bid Bond	Project Site Plan(s)
Bidder Qualifications	Woodland Standard Plans
Agreement	Addendum
Payment Bond	All items included within these Contract Documents.

The Owner will pay to the Contractor in the manner and at such times as set forth in the General Conditions such amounts as required by the Contract Documents.

This Agreement shall be binding upon all parties hereto and their respective heir, executors, administrators, successors, and assigns.

IN WITNESS WHEREOF, the parties hereto have executed, or caused to be executed by their duly authorized officials, this Agreement in duplicate, each of which shall be deemed an original, on the date first above written.

OWNER:

By: _____

Typed Name: _____

Title: _____

ATTEST:

_____

Typed Name: _____

Title:_____

CONTRACTOR:

By: _____

Typed Name: _____

Title: _____

Address: _____

_____

ATTEST:

_____

Typed Name: _____

Title:_____

PAYMENT BOND

KNOW ALL MEN BY THESE PRESENTS: That, WHEREAS, the City of Woodland, State of Washington, on _____, 2013, has awarded to_____ _____, hereinafter designated as "Principal," a Contract for construction of the **2013 Westside Sewer Project**, the terms and provisions of which contract are incorporated herein by reference, and;

WHEREAS, said Principal is required to furnish a bond in connection with this said Contract, providing that if said Principal, or any of his or its subcontractors, shall fail to pay for any materials, provisions, provender or other supplies or teams used in, upon, for, or about the performance of the work contracted to be done, or any other work or labor done thereon of any kind, the Surety of this body will pay the same to extend hereinafter set forth;

NOW, THEREFORE, we the Principal and _____ _____, as Surety, are held and firmly bound unto the City of Woodland, State of Washington, in the penal sum of _____ _____($_____), lawful money of the United States, being one hundred percent (100%) of the Contract amount for the payment of which sum well and truly to be made, we bond ourselves, our heirs, executors, administrators and successors, jointly and severally, firmly by these presents.

NOW, THEREFORE, if the above bounden Principal or any of his subcontractor shall promptly make payment to all persons supplying labor and material or amounts due in the prosecution of the work provided for in said Contract, and any and all duly authorized modifications of said Contract that may hereafter be made, then this obligation shall be void; otherwise, this obligation shall remain in full force and virtue; and if the bounden Principal or any of his subcontractors fails to promptly pay any of the persons or amounts due with respect to work or labor performed by any such claimant, the Surety will pay for the same, in an amount not exceeding the sum specified in this bond, and also in case suit brought upon this bond, a reasonable attorney's fee, be fixed by the court; and this bond shall insure to the benefit of any persons so as to give a right of action to such persons or their assigns in any suit brought upon this bond.

The bond shall insure to the benefit of any all persons, companies and corporations entitle to file claims, so as to give a right of action to them or their assigns in any suit brought upon this bond.

And the said Surety, for value received, hereby stipulates and agrees that no change, extension of time, alteration or addition to the terms of the Contract, or to the work to be performed hereunder, or the Specifications accompanying the same shall in any wise affect its obligations on this bond; and it does hereby waive notice of any such change, extension of time, alteration or addition to the terms of the Contract, or to the work or to the Specifications.

IN WITNESS WHEREOF, the above bounden parties have executed this instrument under their seals this _____ day of _____, 2013 , the name and corporate seal of each corporate party being hereto affixed and these presents duly signed by its undersigned representative, pursuant to authority of its governing body.

_____	_____
_____	_____
_____	_____
Attorney-in-Fact, Surety	Principal

_____

Name and Address / Local Office of Agent

NOTE: Date of Bond must not be prior to date of contract. If Contractor is Partnership, all partners should execute bond.

IMPORTANT: Surety Companies executing Bonds must appear on the Treasury Department's most current list (Circular 570 as amended) and be authorized to transact business in the State where the project is located.

PERFORMANCE BOND

KNOW ALL MEN BY THESE PRESENTS: That, WHEREAS, the City of Woodland, State of Washington, on _____, 2013, has awarded to_____ _____, hereinafter designated as "Principal," a Contract for construction of the **2013 Westside Sewer Project**, the terms and provisions of which contract are incorporated herein by reference, and;

WHEREAS, said Principal is required under the terms of said Contract to furnish a bond for the faithful performance of said Contract;

NOW, THEREFORE, we the Principal and _____ _____, as Surety, are held and firmly bound unto the City of Woodland, State of Washington, in the penal sum of _____ _____($_____), lawful money of the United States, being one hundred percent (100%) of the Contract amount for the payment of which sum well and truly to be made, we bond ourselves, our heirs, executors, administrators and successors, jointly and severally, firmly by these presents.

THE CONDITION OF THIS OBLIGATION IS SUCH, that if the above bound Principal, his or its heirs, executors, administrators, successors, or assigns, shall in all things stand to and abide by, and well and truly keep and faithfully perform the covenants, conditions, and agreements in the said Contact and any alterations made as therein provided, on his or their part, to be kept and performed at the time and in the manner therein specified, and in all respects according to their true intent and meaning, and shall indemnify and save harmless, its officers and agents, as therein stipulated, then this obligation shall become null and void; otherwise it shall be and remain in full force and virtue.

As a condition precedent to the satisfactory completion of the said Contract, the above obligation to the amount of _____ _____($_____), shall hold good for a period of one (1) year after the completion and acceptance of the said work, during which time if the above bounden Principal, his or its heirs, executors, administrators, successors or assigns shall fail to make full, complete and satisfactory repair and replacements or totally protect the said from loss or damage made evident during said period of one (1) year from the date of acceptance of said work, and resulting from or

caused by defective materials or faulty workmanship in the prosecution of the work done, the above obligation in the said sum of _____ _____($_____), shall remain in full force and virtue; otherwise the above obligation shall be void.

And the said Surety, for value received, hereby stipulates and agrees that no change, extension of time, alteration of addition to the terms of the Contract or to the work to be performed hereunder or the Specifications accompanying the same shall in any wise affect its obligations on this bond; and it does hereby waive notice of any such change, extension of time alteration or addition to the terms of the Contract, or to the work, or to the Specifications.

In the event the City of Woodland or its successors or assigns, shall be the prevailing party in an action brought upon this bond, then in addition to the penal sum hereinabove specified, we agree to pay to said, or its successors or assigns, a reasonable sum on account of attorney's fees in such action, which sum shall be fixed by the court.

IN WITNESS WHEREOF, the above bounden parties have executed this instrument under their seals this _____ day of _____, 2013, the name and corporate seal and corporate party being hereto affixed and these presents duly signed by its undersigned representative, pursuant to authority of its governing body.

_____	_____
_____	_____
_____	_____
Attorney-in-Fact, Surety	Principal

_____

Name and Address / Local Office of Agent

NOTE: Date of Bond must not be prior to date of contract. If Contractor is Partnership, all partners should execute bond.

IMPORTANT: Surety Companies executing Bonds must appear on the Treasury Department's most current list (Circular 570 as amended) and be authorized to transact business in the State where the project is located.

NOTICE OF AWARD

DATE: _____, 2013

TO: _____

_____

_____

PROJECT NAME: 2013 Westside Sewer Project

The Owner has considered the Bid submitted by you for the above described work in response to its invitation to bid to asphalt contractors on the MRSC Small Works Roster, and Contract Documents.

You are hereby notified that your bid has been accepted for items in the amount of _____

_____($_____).

You are required by the Bidding Documents to execute the Agreement and furnish the required Contractor's Performance Bond, Payment Bond, and Certificates of Insurance (including complete insurance coverage for the Owner and City of Woodland) within ten (10) calendar days from the date of this notice to you.

Intent to pay prevailing wages shall be demonstrated before Notice to Proceed is executed.

If you fail to execute said Agreement and to furnish said Bonds within ten (10) calendar days from the date of this notice, said Owner will be entitled to such other rights as may be granted by law.

You are required to return an acknowledged copy of this Notice of Award to the Owner.

Dated this _____day of _____, 2013.

City of Woodland, Owner

By: _____

Title: _____

ACCEPTANCE OF NOTICE

Receipt of the above **NOTICE TO AWARD** is hereby acknowledged.

Firm: _____, this _____ day of _____, 2013 .

By: _____

Title: _____

NOTICE TO PROCEED

TO: _____

_____

_____

PROJECT NAME: 2013 Westside Sewer Project

You are hereby notified to commence work in accordance with the Agreement dated _____, 2013, within ten (10) calendar days of the date of this notice, or _____, 2013, and you are to complete the work within sixty (60) working days after beginning construction. The latest date of completion is therefore, _____, 2013.

City of Woodland

Owner

By: _____

Title: _____

ACCEPTANCE OF NOTICE

Receipt of the above **NOTICE TO PROCEED** is hereby acknowledged.

Firm:_____, this the ____ day of _____, 2013.

By:_____

Title:_____

CHANGE ORDER

Change Order No.: 1

Date: _____, 2013

Agreement Date: _____, 2013

NAME OF PROJECT:

2013 Westside Sewer Project

OWNER:

City of Woodland

CONTRACTOR:

_____

The following changes are hereby made to the Contract:

Justification:_____

_____

Original Contract Price was:	$_____
Previously Approved Change Order(s):	$_____
Contract Price prior to this Change Order:	$_____
Contract Price for this Change Order will be *increased* / *decreased* by:	$_____
New Contract Price including this Change Order will be:	$_____

The Contract Time will be (circle one) *increased* / *decreased* / *unchanged* by (_____) working days. The date for substantial completion as of the date of this Change Order, therefore, is _____ (Date).

To be effective, this Order must be approved by the federal agency if it changes the scope or objective of the Project, or as may otherwise be required by the Special Provisions.

Requested by: _____

Recommended by: _____

Ordered by: _____

Accepted by: _____

PART III-CONDITIONS OF THE CONTRACT

CITY OF WOODLAND SPECIAL PROVISIONS

CITY OF WOODLAND
SPECIAL PROVISIONS

STANDARD SPECIFICATIONS

The Standard Specifications for this project shall be the "2012 Standard Specifications for Road, Bridge, and Municipal Construction as prepared by the Washington State Department of Transportation and the Washington State Chapter of the American Public Works Association, and as amended under Amendments to the Standard Specifications.

All modifications made in these Special Provisions shall take precedence over the Standard Specifications and the Amendments to the Standard Specifications. The reference made herein shall only mean the inclusion of the specific technical section referenced, and shall include any amendments made, if applicable.

All number references in these Special Provisions shall be understood to refer to the section or subsection of the Standard Specifications bearing like numbers.

It should be understood that all references to state officers in the Standard Specifications shall mean the corresponding City of Woodland officers for the purpose of this contract. For example, all references to the Washington State Transportation Commission shall mean the City of Woodland Council and all references to the Director of Highway shall mean the City's Public Works Director, etc. Also, any references to Thurston County shall be understood to mean the City of Woodland.

A copy of the Standard Specifications is available for review at the office of the Engineer.

1-01 DEFINITIONS AND TERMS

1-01.3 Definitions

Amend as follows:

Engineer. Woodland Public Works Director or his designated representatives.

Owner. Council of the City of Woodland as represented by it's authorized officers, employees, or agents.

All references to "State Materials Laboratory" shall be revised to read "Contracting Agency designated location".

1-03 AWARD AND EXECUTION OF CONTRACT

1-03.2 Award of Contract

Add the following paragraph:

"The award of the contract shall be made only to responsible contractors that possess the potential ability to perform successfully under the terms and conditions of the

Agreement. Consideration shall be given to contractor integrity, compliance with public policy, record of past performance, and financial and technical resources. Any and all bids may be rejected when there are sound documented reasons for doing so. The Owner reserves the right to make these judgments. The Owner will award the contract within forty-five (45) days after the Bid Opening.

The "lowest responsible Bidder" shall be determined from the Contract Unit Bid Prices and Bid Proposal if selected by the Owner."

1-04 SCOPE OF WORK

Add the following paragraph:

Project consists of collection system improvements consisting of relining existing sewer mains with cured-in-place-pipe (CIPP). Sections of sewer main that cannot be relined will be replaced with new 8" PVC Sewer Main. Sewer mains to be relined or replaced will be located in the older part of Woodland west of Atlantic Avenue and south of West Scott Avenue. Work generally includes 2,400 feet of 10" concrete main, 10,400 feet of 8" concrete main, and 4,700 feet of 8" AC/transite main. There is another 2,900 feet of 8" main that the City is unsure whether those lines are concrete, transite, or PVC. The mains that are concrete or transite will be CIPP lined. The unknown lines that are PVC will be cleaned and inspected but not lined. Main sections that cannot be lined due to defects or bends will be replaced with 8" or 10" PVC Sewer Main to match the existing sewer main on either side of the defect and the rest of the main will be lined.

1-05 CONTROL OF WORK

1-05.3 Plans and Working Drawings

Add the following paragraph:

"The City will furnish to the Contractor, free of charge, three (3) copies of the contract documents. Additional copies of the contract documents may be obtained on request by paying a $20 fee. The Contractor shall keep one copy of the contract documents on the project, in good order, available to the Engineer and to his representatives. All plans, drawings, specifications, and copies thereof furnished by the Engineer are his property. They are not to be used on other work and, with the exception of the signed contract set, are to be returned to him on request at the completion of the work."

1-05.10(1) Guarantees

Add the following paragraph:

"The Contractor shall guarantee all work for a period of one year from and after the date of acceptance of the work by the Owner."

1-05.12 Final Acceptance

Add the following paragraphs:

"Prior to substantial completion, the City, with the approval of the Contractor, may use any completed or substantially completed portions of the work. Such use shall not constitute an acceptance of such portions of the work.

The acceptance by the Contractor of final payment shall be and shall operate as a release to the City of all claims and all liability to the Contract other than claims in stated amounts as may be specifically excepted by the Contractor in writing prior to the request for final payment for all things done or furnished in connection with this work and for every act and neglect of the City and it's agents and others relating to or arising out of this work. However, any payment, final or otherwise, or any acceptance, shall not release the Contractor or it's sureties from any obligations under the Contract Documents or the Performance and Payment Bonds or diminishes the City's rights under the guaranty provisions."

1-06 CONTROL OF MATERIAL

1-06.2(1) Samples and Tests for Acceptance

Section 1-06.2(2) is supplemental as follows:

Material sampling for testing may be performed up to and including the point of incorporation of the respective material into the project. The definition of "qualified testing personnel and calibrated or verified equipment" shall not be referenced to the WAQTC requirements.

The Contractor shall provide passing test results to the Engineer for all sources and materials proposed for the hot mix asphalt prior to use.

If material fails to meet specifications, and re-test is performed on material from the same source by a private laboratory, the re-testing shall be at the Contractor's expense.

1-07 LEGAL RELATIONS AND RESPONSIBILITIES TO THE PUBLIC

1-07.2 State Taxes

Add the following paragraph:

"Sales Tax will be added to the full contract price."

1-07.5(3) State Department of Ecology

Sand and Gravel Source Compliance to the Clean Water Act
Each source/supplier of sand and gravel for this project will provide either a current Sand and Gravel permit number issued by the Washington State Department of Ecology, or a current Application for Coverage, also issued by the Department of Ecology prior to source approval.

1-07.17 Utilities and Similar Facilities

Add the following paragraphs:

"The Contractor shall call the Northwest Utilities Notification Center (One Call Center) at 811 for field location, not less than two or more than ten working days before the scheduled date for commencement of excavation which may affect underground utility facilities. The Contractor shall under no circumstances expose any utility without first obtaining permission from the appropriate utility agency.

The Contractor shall be solely and directly responsible to the Owner and Owners of Utilities for any and all damage, disruption of service, or claims which may result from the construction operations. The Contractor shall make all necessary arrangements for protection of existing power and telephone lines in the vicinity of this Contract that interfere with construction.

Neither the Owner nor its officers or agents shall be responsible to the Contractor for damages as a result of the Contractor's failure to protect utilities encountered in the work.

Restoration of utilities damaged by the Contractor, his agents or employees, shall be accomplished by the utility involved at the Contractor's expense."

1-07.18 Public Liability and Property Damage Insurance

Delete this section in its entirety, and replace it with the following:

1-07.18 Insurance *(May 10, 2006 APWA GSP)*

1-07.18(1) General Requirements

A. The Contractor shall obtain the insurance described in this section from insurers approved by the State Insurance Commissioner pursuant to RCW Title 48. The insurance must be provided by an insurer with a rating of A-: VII or higher in the A.M. Best's Key Rating Guide, which is licensed to do business in the state of Washington (or issued as a surplus line by a Washington Surplus lines broker). The Contracting Agency reserves the right to approve or reject the insurance provided, based on the insurer (including financial condition), terms and coverage, the Certificate of Insurance, and/or endorsements.

B. The Contractor shall keep this insurance in force during the term of the contract and for thirty (30) days after the Physical Completion date, unless otherwise indicated (see C. below).

C. If any insurance policy is written on a claims made form, its retroactive date, and that of all subsequent renewals, shall be no later than the effective date of this Contract. The policy shall state that coverage is claims made, and state the retroactive date. Claims-made form coverage shall be maintained by the Contractor for a minimum of 36 months following the Final Completion or earlier termination of this contract, and the Contractor shall annually provide the Contracting Agency with proof of renewal. If renewal of the claims made form of coverage becomes unavailable, or economically prohibitive, the

Contractor shall purchase an extended reporting period ("tail") or execute another form of guarantee acceptable to the Contracting Agency to assure financial responsibility for liability for services performed.

D. The insurance policies shall contain a "cross liability" provision.

E. The Contractor's and all subcontractors' insurance coverage shall be primary and non-contributory insurance as respects the Contracting Agency's insurance, self-insurance, or insurance pool coverage.

F. All insurance policies and Certificates of Insurance shall include a requirement providing for a minimum of 30 days prior written notice to the Contracting Agency of any cancellation in any insurance policy.

G. Upon request, the Contractor shall forward to the Contracting Agency a full and certified copy of the insurance policy(s).

H. The Contractor shall not begin work under the contract until the required insurance has been obtained and approved by the Contracting Agency.

I. Failure on the part of the Contractor to maintain the insurance as required shall constitute a material breach of contract, upon which the Contracting Agency may, after giving five business days notice to the Contractor to correct the breach, immediately terminate the contract or, at its discretion, procure or renew such insurance and pay any and all premiums in connection therewith, with any sums so expended to be repaid to the Contracting Agency on demand, or at the sole discretion of the Contracting Agency, offset against funds due the Contractor from the Contracting Agency.

J. All costs for insurance shall be incidental to and included in the unit or lump sum prices of the contract and no additional payment will be made.

1-07.18(2) Additional Insured

All insurance policies, with the exception of Professional Liability and Workers Compensation, shall name the following listed entities as additional insured(s):

- The City of Woodland and its officers, elected officials, employees, agents, and volunteers.

The above-listed entities shall be additional insured(s) for the full available limits of liability maintained by the Contractor, whether primary, excess, contingent or otherwise, irrespective of whether such limits maintained by the Contractor are greater than those required by this Contract, and irrespective of whether the Certificate of Insurance provided by the Contractor pursuant to 1-07.18(3) describes limits lower than those maintained by the Contractor.

1-07.18(3) Subcontractors

Contractor shall ensure that each subcontractor of every tier obtains and maintains at a minimum the insurance coverages listed in 1-07.18(5)A and 1-07.18(5)B. Upon request of the Contracting Agency, the Contractor shall provide evidence of such insurance.

1-07.18(4) Evidence of Insurance

The Contractor shall deliver to the Contracting Agency a Certificate(s) of Insurance and endorsements for each policy of insurance meeting the requirements set forth herein when the Contractor delivers the signed Contract for the work. The certificate and endorsements must conform to the following requirements:

1. An ACORD certificate or a form determined by the Contracting Agency to be equivalent.
2. Copies of all endorsements naming Contracting Agency and all other entities listed in 1-07.18(2) as Additional Insured(s), showing the policy number. The Contractor may submit a copy of any blanket additional insured clause from its policies instead of a separate endorsement. A statement of additional insured status on an ACORD Certificate of Insurance shall <u>not</u> satisfy this requirement.
3. Any other amendatory endorsements to show the coverage required herein.

1-07.18(5) Coverages and Limits

The insurance shall provide the minimum coverages and limits set forth below. Providing coverage in these stated minimum limits shall not be construed to relieve the Contractor from liability in excess of such limits. All deductibles and self-insured retentions must be disclosed and are subject to approval by the Contracting Agency. The cost of any claim payments falling within the deductible shall be the responsibility of the Contractor.

1-07.18(5)A Commercial General Liability

A policy of Commercial General Liability Insurance, including:

Per project aggregate
Premises/Operations Liability
Products/Completed Operations for one year following final acceptance of the work.
Personal/Advertising Injury
Contractual Liability
Independent Contractors Liability
Stop Gap / Employers' Liability
Explosion, Collapse, or Underground Property Damage (XCU)
Blasting (only required when the Contractor's work under this Contract includes exposures to which this specified coverage responds)

Such policy must provide the following minimum limits:

$1,000,000	Each Occurrence
$2,000,000	General Aggregate
$1,000,000	Products & Completed Operations Aggregate
$1,000,000	Personal & Advertising Injury, each offence

Stop Gap / Employers' Liability

$1,000,000	Each Accident
$1,000,000	Disease - Policy Limit
$1,000,000	Disease - Each Employee

1-07.18(5)B Automobile Liability

Automobile Liability for owned, non-owned, hired, and leased vehicles, with an MCS 90 endorsement and a CA 9948 endorsement attached if "pollutants" are to be transported. Such policy(ies) must provide the following minimum limit:

$1,000,000 Combined Single Limit

1-07.18(5)C Workers' Compensation

The Contractor shall comply with Workers' Compensation coverage as required by the Industrial Insurance laws of the state of Washington.

1-08 PROSECUTION AND PROGRESS

1-08.5 Time For Completion

Add the following paragraph:

"The project shall begin within fourteen calendar days (14) after the agreement is signed. All work will be completed within sixty working days (60) after work commences."

1-08.7 Maintenance During Suspension

The Contractor shall maintain the erosion and sediment control even if the Contracting Agency is performing the routine maintenance work on the other items.

1-10 TEMPORARY TRAFFIC CONTROL

1-10.2(2) Traffic Control Plans

Add the following paragraphs:

"During the CIPP Process, the Contractor is required to keep two lanes of traffic open, otherwise the Contractor will need to provide flagging as needed for appropriate traffic control. Any flagging done will be paid for by the lump sum item Other Temporary Traffic Control. Contractor can block off parking lane next to project areas as needed for construction equipment. Contractor is required to place appropriate warning signs at all locations per WSDOT standard specifications.

Lane closures and detours for excavation associated with point repairs will be discussed and approved by the Public Works Director at least 48 hours before closure. Contractor shall submit a traffic control plan and receive approval prior to beginning any excavation."

2-01 CLEARING, GRUBBING, AND ROADSIDE CLEANUP

2-01.4 Measurement

Add the following:

No unit of measurement shall apply to the lump sum price for "Roadside Cleanup".

"Roadside Cleanup" shall include minor grading of slopes and restoration of all property, landscaping, and approaches to original condition that are adjacent to, impacted by, or on which work has occurred. This work includes reseeding lawns disturbed by construction. Final clean up shall be to the satisfaction of the Engineer and per Section 1-04.11."

2-07 WATERING

Add the following:

The Contractor shall obtain water at his expenses, in a legal manner. The Contractor may not obtain water from natural sources without permission from local authorities that have jurisdiction.

5-04 HOT MIX ASPHALT

5-04.1 Hot Mix Asphalt

Add the following:

Any reference in the Plans or Specifications to Asphalt Concrete Pavement, ACP, or AC shall be equivalent to the terms Hot Mix Asphalt or HMA.

5-04.3 Construction Requirements

Add the following:

The Contractor shall tack and sand all edges, cold joints, and tapers which join existing asphalt pavement with new asphalt.

5-04.3(8)A1 General

Add the following:

"The contractor is required to supply compaction test results of all asphalt placement using a nuclear gauge testing unit. In place density must be at least 92% of theoretical maximum density per WSDOT FOP for AASHTO T 209. At least 1 asphalt sample for every day of placement will be taken to a certified laboratory to verify asphalt densities.

5-04.5 Payment

Add the following:

"Payment for Material Testing will be part of the unit price for point repairs."

8-01 EROSION CONTROL AND WATER POLLUTION CONTROL

8-01.1 Erosion Control and Water Pollution Control

Best Management Practice (BMP) means physical, structural, and managerial practices that when used singly or in combination prevent or reduce erosion.

8-01.3(8) Street Cleaning

Brooming shall include removing all loose aggregate from the sidewalks, ramps and driveways.

8-01.5 Payment

Add the following:

"All costs associated with “Erosion Control” as defined under 8-01.1 shall be included in the unit price for point repairs.”

9-03.8(2) HMA Test Requirements

ESAL’S
The number of ESAL’S for the design and acceptance of the HMA shall be as follows:

0.3 million to <3 million for CI. ½ in. PG 64-22

STANDARD PLANS DATE OF AUGUST 6, 2012

The State of Washington Standard Plans for Road, Bridge and Municipal Construction M21-01 transmitted under Publications Transmittal No. PT 12-050, effective August 6, 2012 is made a part of this contract.

TECHNICAL SPECIFICATIONS
CURED-IN-PLACE PIPE

PART I - GENERAL

1.01 *THE REQUIREMENT*

A. This Specification Covers the work necessary to furnish and install complete, the cured-in- place pipe (CIPP). The CONTRACTOR shall provide all materials, labor, equipment, and services necessary for bypass pumping and/or diversion of sewage flows, cleaning and television inspection of sewers to be lined, liner installation, reconnection of service connections, and final television inspection and testing of lined pipe system.

1.02 *REFERENCE SPECIFICATIONS, CODES, AND STANDARDS*

A. The following references are part of this Specification, in case of conflict between the requirements of this Specification and those of the listed documents, the requirements of this Specification shall prevail. The latest edition of the following references shall be used:

ASTM D543 Standard Test Methods for Resistance of Plastics to Chemical Reagents

ASTM D790 Test Methods for Flexural Properties of Unreinforced and Reinforced mastic and Electrical Insulating Materials

ASTM F1216 Standard Practice for Rehabilitation of Existing Pipelines and Conduits by the Inversion and Curing of Resin-impregnated Tube

1.03 *CONTRACTOR SUBMITTALS*

A. The CONTRACTOR shall provide submittals on all lining materials and resins, and shall furnish manufacturer certification that the liner materials are in compliance with the specifications, codes, and standards referenced herein. The submittals shall include details of all component materials and construction details including complete manufacturers recommendations for storage procedures and temperature control, handling and inserting the liner, curing details, service connection methods, and trimming and finishing. The CONTRACTOR shall also provide manufacturers certification, field measurements and pipe sizing calculations, which demonstrate that the liner has been properly undersized to avoid the creation of wrinkles or folds.

B. The CONTRACTOR shall submit bypass pumping and/or diversion plans for review by the ENGINEER at least 10 working days prior to the work. The CONTRACTOR shall notify the ENGINEER 24 hours prior to commencing with the bypass pumping operation. The CONTACTOR'S plan for bypass pumping shall be satisfactory to the ENGINEER before the CONTRACTOR shall be allowed to commence bypass pumping.

C. The CONTRACTOR shall submit shop drawings that identify the liner insertion and bypass pumping locations and methods with sufficient detail to assure that the work can be accomplished without sewage spill. The bypass-pumping plan shall include an emergency response plan to be followed in the event of a failure of the bypass pumping system.

D. The CONTRACTOR shall submit the resin manufacture's healing requirements. Additionally, the CONTRACTOR shall conceptually discuss with the ENGINEER the general curing guidelines.

1.04 *QUALITY ASSURANCE.*

A. The finished liner shall be continuous over the entire length of an insertion run between two manholes or access points and shall be free from visual defects such as foreign inclusions, dry spots, pinholes, and delamination.

B. Wrinkles in the finished liner pipe that cause a backwater of one (1) inch or more or reduce the hydraulic capacity of the pipe are unacceptable and shall be removed and repaired by the CONTRACTOR at the CONTRACTOR'S expense. The CONTRACTOR shall remove a section of pipe, if so directed by the ENGINEER, to determine if a void between the wrinkle and pipe wall exists. If so proven that a void does exist, the CONTRACTOR shall repair and replace that section of pipe at the CONTRACTOR'S expense. If a void does not exist, the CONTRACTOR shall repair and replace that section of pipe at the OWNER'S expense. Methods of repair shall be proposed by the CONTRACTOR and submitted to the ENGINEER for review.

1.05 *WARRANTY*

A. The CONTRACTOR shall provide a warranty to be in force and effect for a period of one year from the date of final acceptance. The warranty shall cause the CONTRACTOR to repair or replace the liner should failure result from faulty materials or installation.

PART *2*- PRODUCTS

2.01 MATERIALS

A. Liner Tube:

1. The liner tube shall consist of one or more layers of flexible needled felt or an equivalent woven and/or non-woven material capable of carrying resin, withstanding installation pressures and curing temperatures, and is compatible with the resin system used. The liner shall be fabricated to a size that, when installed, will fit the internal circumference of the existing pipe without any space between the liner and existing pipe wall.

2. The resin used shall be compatible with the rehabilitation process, shall be able to cure in the presence or absence of water and the initiation temperature for cure shall be as recommended by the resin manufacturer and reviewed by the ENGINEER.

3. The liner shall be fabricated from materials which when cured, will be chemically resistant to withstand internal exposure to sewage gases containing quantities of hydrogen sulfide, carbon monoxide, methane, petroleum hydrocarbons, saturation with moisture, diluted sulfuric acid, and other chemical reagents determined by the ENGINEER.

4. The minimum tube length shall be that deemed necessary by the CONTRACTOR to effectively span the distance from the inlet to the outlet of the respective manholes, or access points, unless otherwise specified. The CONTRACTOR shall verify the lengths in the field before impregnation of the tube with resin. Individual insertion runs may be made over one or more manhole sections as determined in the field by the CONTRACTOR and reviewed by the ENGINEER.

   Prior to insertion, the liner shall be free of all visible tears, holes, cuts, foreign materials, and other defects.

   Prior to insertion, the CONTRACTOR shall provide data on the maximum allowable stresses and elongation of the tube. The exterior of the manufactured tube shall be

marked along its length at regular intervals not to exceed five feet. These marks shall be used as a gauge to measure elongation during insertion. Should the overall elongation of a reach exceed five percent (5%) the liner tube shall be rejected and replaced.

B. Resin:

1. Unless otherwise specified, provide a general purpose, unsaturated, thermosetting, polyester, vinyl ester, or epoxy resin able to cure in the presence or absence of water, and a catalyst system compatible with the insertion process.

2. Resin-shall not be subjected to ultraviolet light and shall form no excessive bubbling or wrinkling during lining.

2.02 PHYSICAL PROPERTIES

A. The ClPP system shall conform to and comply with the minimum standards listed below.

Characteristic	**Test Method**	**Polyester Resin**	**Vinylester & Epoxy Resins**
Flexural Strength	ASTM D790	4,500 psi	5,000 psi
Flexural Modulus (short term)	ASTM D790	250,000 psi	300,000 psi
Flexural Modulus (long term)		125,000 psi	150,000 psi

B. All liner thicknesses will be 6 mm. This was the recommended width based on a review of assumed existing pipe and soil conditions and the resin's physical properties shown in Section 2.02.A.

PART 3 - EXECUTION

3.01 PREPARATION

A. Bypass Pumping

1. The CONTRACTOR shall provide bypass pumping and/or diversion when required for acceptable completion of the liner installation. Bypass pumping shall consist of furnishing, installing, and maintaining all power, primary and standby pumps, appurtenances and bypass piping required to maintain existing flows and services.

2. Bypass -pumping shall be done in such a manner as not to damage private or public property, or create a nuisance or public menace. The pumped sewage shall be in an enclosed hose or pipe that is adequately protected from traffic, and shall be redirected into the sanitary sewer system. Dumping or free flow of sewage on private property, gutters, streets, sidewalks, or into storm sewers is prohibited.

3. The CONTRACTOR shall take all necessary precautions including constant monitoring of bypass pumping to insure that no private residences or properties are subjected to a sewage backup or spill. The CONTRACTOR shall be liable for all cleanup, damages, and resultant fines in the event of a spill. After the work is completed, flow shall be restored to normal.

B. Cleaning and Inspection of Existing Sewer.

1. The CONTRACTOR shall be responsible for cleaning, inspecting, confirming the inside diameter and determining the condition of each manhole-to-manhole segment to be lined. The cleaning process shall include the removal of all roots. A television inspection shall be performed by the CONTRACTOR after the sewer cleaning

operation, point repairs, and grouting is completed. The television inspection shall be completed in the same direction each time and shall be done with a CCTV color camera recorded in VHS or DVD format. A pivot head camera shall be used for all pipelines that are 6-inches in diameter or greater to allow detailed lateral inspection. A copy of the television inspection videotapes from all televising operations shall be provided to the ENGINEER for review of the liner installation.

C. Point Repairs.

1. It shall be the responsibility of the CONTRACTOR to clear the line of obstructions such as solids, offset joints, protruding service connections, collapsed pipe or mortar that will cause more than a one-inch (1”) deflection in the liner or prevent liner insertion. If inspection reveals an obstruction that cannot be removed by conventional sewer cleaning equipment or by remotely performed point repair methods acceptable to the ENGINEER, then the CONTRACTOR shall make a point repair excavation to uncover and remove or repair the obstruction. Before any point repair excavation is pursued, the CONTRACTOR shall give the ENGINEER three (3) working days notice. Point repair excavation shall proceed only with the ENGINEER'S written authorization. Protruding laterals shall be removed either internally with a hydrojet cutter or by external point repair. The type and location of the repairs are included with the Project Documents.
2. Point repairs will be paid for based on the unit price in the bid proposal for replacing one 10 foot section of existing 8” or 10” sewer main 9’ deep with new PVC Sewer Main. This unit price should include all costs to excavate, replace sewer main, backfill, and repave road according to standard specifications and City of Woodland Construction Standards. If more than 10’ of sewer main is replaced in a repair, the total cost of the repair will be the length of main replaced divided by 10 feet multiplied by the unit price. If the sewer main is deeper than 9’ then the unit price will be increased by multiplying the unit price with the factor average depth divided by 9’.

D. Grouting of Severe Defects.

1. It shall be the responsibility of the CONTRACTOR to grout severe open joints and cracks in the pipeline. The CONTRACTOR shall be required to grout all open joints and cracks that in the CONTRACTOR'S opinion will impede the specified performance of the liner except that all open joints greater than one (1) inch shall be grouted irrespective of the CONTRACTOR'S assessment. The locations to be grouted shall be determined by the CONTRACTOR and Engineer based on videotapes provided with the Project Documents.
2. Grouting of Severe Defects will be paid for based on the unit price in the bid proposal for grouting a 10’ section of sewer main. If more than 10’ of sewer main is grouted, the total cost of grouting will be the length of main grouted divided by 10 feet multiplied by the unit price.

E. Manholes.

1. The CONTRACTOR shall protect the manholes to withstand forces generated by equipment, water or air pressure used while inserting the tube.

3.02 INSTALLATION

A. Resin Impregnation.

1. The uncured resin in the original containers and the unimpregnated fiber-felt tube shall be impregnated by vacuum or other means prior to installation. The materials and wetout procedure shall be subject to inspection by the ENGINEER. A resin and catalyst system that is compatible with the requirements of the method shall be used.
2. The impregnated liner bag shall be transported to and stored at the site in such a manner that it will not be damaged, exposed to direct sunlight, or result in any public safety hazard. The impregnated liner bag shall be kept cool during shipment and storage. All materials shall be subject to inspection and review prior to installation.

B. Liner Installation.

1. The impregnated tube shall be inserted through an existing manhole or other access approved by the ENGINEER by means of the installation process. The application of hydrostatic head, compressed air, or other means shall fully extend the liner to the next designated manhole or termination point and inflate and firmly adhere the liner to the pipe wall.
2. The liner shall be installed at a rate less than 10 feet per minute at all times.

C. Curing.

1. After placement is complete, suitable heat source and distribution equipment shall be provided. The equipment shall be capable of circulating hot water, air, and/or steam throughout the section by means of a pre-strung hose, which has been perforated in accordance with the manufacturers recommendations or other methods acceptable by the ENGINEER to raise the temperature uniformly above the temperature required to affect a resin cure. This temperature shall be determined by the manufacturer based on the resin/catalyst system employed.
2. The heat source piping shall be fitted with continuous monitoring thermocouples to gauge the temperature of the incoming and outgoing water, steam, andlor air supply. Water, steam, or air temperature during the cure period shall meet the requirements of the resin manufacturer as measured at the heat source inflow and outflow return lines.

   At-the direction of the ENGINEER, the CONTRACTOR shall provide standby equipment to maintain the heat source supply. An additional continuous monitoring thermocouple shall be placed between the impregnated felt tube and the pipe invert at the remote manhole and at a point midway between the upstream and downstream manholes to determine the temperature during the cure. The temperature during the cure shall not be less than 130 degrees Fahrenheit at the boundary between the pipe wall and the liner unless otherwise directed by the ENGINEER because of the resin system used.
3. The initial cure shall be deemed complete when inspection of the exposed portions of the liner appears hard and sound and the remote temperature sensors indicate that an exotherm has occurred, The cure period shall be of duration recommended by the resin manufacturer during which time the recirculation of the water, steam, and/or air and cycling of the heat exchanger continuously maintain the required temperature.
4. Temperature shall be maintained during the curing period as recommend by the resin manufacturer, and shall follow the healing schedule supplied by the manufacturer and reviewed by the ENGINEER.

D. Cool Down.

1. The hardened liner shall be cooled to a temperature below 100 degrees Fahrenheit before relieving the static head or pressure in the lined pipe and returning normal flow back into the system. The cool down may be accomplished by introducing cool water or air into the lined pipe. Care shall be taken in the release of the static head or pressure so that a vacuum will not develop which could damage the newly installed liner.
2. If the liner fails to make a tight seal at the manhole walls, a seal consisting of a resin mixture compatible with the liner/resin system shall be applied in accordance with manufacturer specifications and approved by the ENGINEER.

3.03 SERVICE LINE RECONNECTION

A. The CONTRACTOR shall be responsible for reconnecting service connections to the lined pipe. Reconnections of service connections shall be completed by one of the following methods:

1. Internally reconnected by using a pivot-head CCTV camera and a remote cutting tool to locate the service connections from inside the lined pipe, cutting a hole matching the service connection diameter.

CONTRACTOR shall provide a nearly full-diameter hole, free, from burrs or projections and with a smooth and crack-free edge. The hole shall be 95 percent minimum and 100 percent maximum of the original service connection diameter. The invert of the service connection shall match the bottom of the reinstated service opening.

2. By excavating by hand and/or mechanical equipment to the location of the service connections tie-in, cutting the existing pipe and liner material, and installing a saddle acceptable to the ENGINEER. The excavation process shall be completed by mechanical means as defined in the project documents or by hand digging & required.

3. Other remote methods as approved by the ENGINEER.

B. An estimate of the number of service connections to be reconnected by the CONTRACTOR is provided in the bid schedule.

3.04 TESTING

A. Material Testing.

1. All material testing shall-be performed by a registered independent, third party laboratory.

2. The CONTRACTOR shall provide certified test results of the short-term properties of the cured lining material from the actual installed liner at a minimum of one location per each liner insertion setup.

3. The cured liner shall be sampled and tested for flexural strength and flexural modulus (short term). Flexural strength and modulus shall be tested in accordance with the requirements of ASTM 0790. The liner shall be in compliance with the physical properties stated under Section 2.02 of this specification. A certificate of compliance shall be provided for long-term flexural modulus.

4. Corrosion resistance requirements shall be as stated in ASTM F1 216, Section X2, Chemical Resistance Tests.

5. Delamination testing shall be in accordance with ASTM F1216, Section 8.4 if required by the ENGINEER.

B. Field Testing.

1. Test line for exfiltration in accordance with ASTM F1216, Section 8.2 prior to service line reconnections. Testing shall exclude maximum pressure limitation (4.3 psi) at lowest end. Leakage testing shall be performed after all dry and non-bondable hoses and tubes are completely removed from the pipe.
2. After completion of all liner insertions, service reconnections, and finish work at the manholes the sewer shall be televised with a color CCTV tilt-head camera recorded on a DVD. The original DVD shall be provided to the ENGINEER.

PART 4 - PAYMENT

4.01 CURED-IN-PLACE PIPE

A. Payment will be made for the actual length of cured-in-place pipe installed. The length shall be measured from centerline of manhole to centerline of manhole. The unit price per linear foot installed shall include all materials, labor, equipment and supplies necessary for the complete liner installation, CCTV inspections and re-inspections, video tapes, trimming of intruding laterals, flow diversion, sealing at manholes, testing, and cleaning and restorations.

4.02 GROUTING OF SEVERE DEFECTS

A. Payment will be made for the actual number of grout repairs completed. The unit price per grout repair shall include all materials, labor, equipment, and supplies necessary to complete the work as necessary.

4.03 SERVICE LINE RECONNECTIONS

A. Internal Cutting or Other Remote Methods. Payment will be made for the actual number of needed service lines reconnected by internal cutting or other remote methods. The unit price per service line connected shall include all materials, labor, equipment and supplies necessary to complete the work as specified.

B. Point Excavation. Payment will be made for the actual number of needed service lines reconnected by point excavation. The unit price per service line connected shall include all materials, labor, equipment and supplies necessary to complete the work as specified.

PART IV- CONTRACT DRAWINGS

2013 Westside Sewer Project Site Map
City of Woodland Standard Sewer Drawings
- S-01 – Construction Specifications – Sanitary Sewer
- S-03 – Flexible Pipe Bedding
- S-04 – Trench: Restore, Backfill, Bedding, & Surfacing
- S-05 – Service Lateral Connections
- S-08 – Standard Precast Manhole
- S-11 – Manhole Connection
- S-16 – Sanitary Stub Marker
- S-17 – Sewer Cleanout

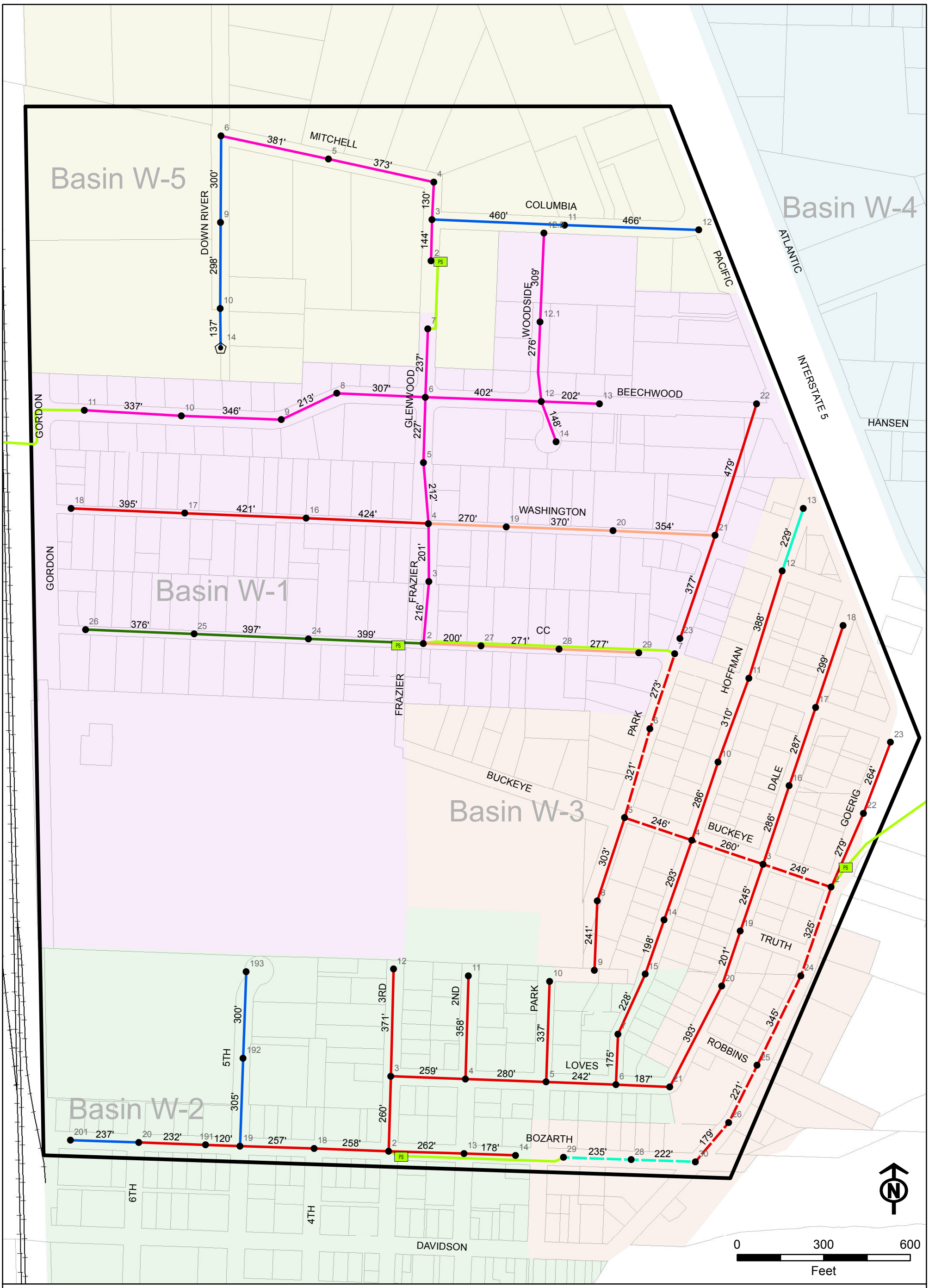

WESTSIDE SEWER PROJECT, CAP 13-02
CIPP MAP
JANUARY 2013

City of WOODLAND WASHINGTON Lewis River Valley

GRAVITY SEWER LINES

- 10" - CONC - 2,418 Feet
- 10" - PVC - 458 Feet (No CIPP)
- 8" - CONC - 10,375 Feet
- 8" - PVC - 2,503 Feet (No CIPP)
- 8" - PVC/CONC - 229 Feet
- 8" - TRANS - 4,662 Feet
- 8" - TRANS/CONC - 1,742 Feet
- 8" - TRANS/PVC - 1,172 Feet

SEWER POINTS

- XX Manhole and Number
- XX Clean-Out and Number

FORCE MAIN LINES

- Force Main

CONSTRUCTION SPECIFICATIONS FOR SANITARY SEWER

ALL MATERIALS AND INSTALLATION OF SANITARY SEWERS SHALL BE IN CONFORMANCE WITH THE MOST CURRENT EDITION OF THE STANDARD SPECIFICATIONS FOR ROAD, BRIDGE, AND MUNICIPAL CONSTRUCTION, HEREINAFTER REFERRED TO AS THE "STANDARD SPECIFICATIONS", PREPARED BY THE WASHINGTON STATE CHAPTER OF THE AMERICAN PUBLIC WORKS ASSOCIATION (APWA) AND THE WASHINGTON STATE DEPARTMENT OF TRANSPORTATION, EXCEPT AS NOTED HEREIN OR ON THE STANDARD PLANS. WHEREVER THE STANDARD SPECIFICATIONS REFER TO THE OWNER AS EITHER THE "STATE" OR "SECRETARY" OR WHEN REFERENCE IS MADE TO THE DEPARTMENT OF TRANSPORTATION IT SHALL BE UNDERSTOOD THAT THE STANDARD SPECIFICATIONS SHOULD READ THE "CITY".

ALL SANITARY SEWER CONSTRUCTION IS SUBJECT TO INSPECTION AND APPROVAL BY THE CITY OF WOODLAND PUBLIC WORKS DEPARTMENT. THE CONTRACTOR SHALL NOTIFY THE CITY AT (360) 225-7999 AT LEAST 48-HOURS PRIOR TO THE START OF CONSTRUCTION. A PRE-CONSTRUCTION CONFERENCE MAY BE REQUIRED.

THE CONTRACTOR IS REQUIRED TO NOTIFY ALL UTILITIES 48 HOURS PRIOR TO COMMENCEMENT OF WORK. THE CONTRACTOR MUST CONTACT THE UNDERGROUND UTILITY NOTIFICATION CENTER "CALL BEFORE YOU DIG" AT (800) 424-5555.

FINAL ACCEPTANCE OF SANITARY SEWERS ARE SUBJECT TO SECTIONS 1-05.11, 1-05.12, 7-17.3(2)E, 7-17.3(2)F, 7-17.3(2)G AND 7-17.3(2)H OF THE APWA STANDARD SPECIFICATIONS. TELEVISION INSPECTION SHALL INCLUDE VIDEO OF ALL MANHOLES IN ADDITION TO THE PIPE. THE CONTRACTOR SHALL WARRANTY ALL WORK DONE UNDER CITY CONTRACT FOR A PERIOD OF TWO (2) YEARS AS PER OF THE CITY OF WOODLAND GENERAL PROVISIONS FOR MUNICIPAL CONSTRUCTION.

LOCAL VARIATIONS IN SLOPE (I.E. "BELLIES") MUST BE NO MORE THAN 1/2" MAXIMUM. VARIATIONS IN EXCESS OF THESE TOLERANCES MUST BE REPAIRED AT THE CONTRACTOR'S EXPENSE TO THE SATISFACTION OF THE CITY.

ALL PIPE AND FITTINGS SHALL CONFORM TO THE FOLLOWING: A. CONCRETE PIPE, NON-REINFORCED, SHALL CONFORM TO ASTM C 14, CLASS 2, EXCEPT AS OTHERWISE NOTED. CONCRETE PIPE, REINFORCED, SHALL CONFORM TO ASTM C 76, AND SHALL BE OF THE CLASS NOTED ON THE PLANS OR IN THE SPECIAL PROVISIONS. B. POLYVINYL CHLORIDE (PVC) SEWER PIPE 15" DIAMETER OR LESS SHALL CONFORM TO ASTM D3034, SDR 35. IT SHALL HAVE A MINIMUM PIPE STIFFNESS OF 46 PSI. PVC PIPE 18" DIAMETER SHALL CONFORM TO ASTM F 679. ALL PVC PIPE SHALL HAVE AN INTEGRAL BELL GASKETED JOINT WITH ELASTOMERIC GASKET AND SHALL BE FURNISHED IN 12-1/2 FOOT LAYING LENGTHS. C. DUCTILE IRON (DI) PIPE SHALL CONFORM TO ANSI A21.51 OR AWWA C151, WITH PUSH-ON JOINTS, CLASS 52, UNLESS OTHERWISE NOTED.

INSTALLATION OF PIPE AND MANHOLES SHALL CONFORM TO THE FOLLOWING: A. CONCRETE PIPE SHALL BE INSTALLED IN CONFORMANCE WITH STANDARD S-02 (RIGID PIPE) AND S-04 (TRENCHING). B. PVC PIPE SHALL BE INSTALLED IN ACCORDANCE WITH MANUFACTURER'S RECOMMENDATIONS AND SHALL CONFORM TO STANDARD S-03 (FLEXIBLE PIPE) AND S-04 (TRENCHING). C. MANHOLES SHALL CONFORM WITH STANDARDS S-08 THROUGH S-15.

MANHOLES, CLEANOUTS, SERVICE LATERAL CONNECTIONS, TRENCH EXCAVATION, PIPE BEDDING AND STREET RESTORATION, AND APPURTENANCES SHALL CONFORM TO THE DETAILS SHOWN ON THE STANDARD PLANS. ALL OTHER CONSTRUCTION SHALL CONFORM TO THE STANDARD DETAILS CONTAINED IN THE STANDARD PLANS FOR ROAD, BRIDGE AND MUNICIPAL CONSTRUCTION.

THE CONTRACTOR SHALL COMPLY WITH THE PROVISIONS OF ALL PERMITS ISSUED, OR EASEMENTS GRANTED TO THE CITY IN CONJUNCTION WITH THE CONSTRUCTION OF SANITARY SEWERS. THE CONTRACTOR SHALL OBTAIN A RIGHT-OF-WAY PERMIT FOR WORK WITHIN THE PUBLIC RIGHT-OF-WAY.

THE CONTRACTOR SHALL SUBMIT AN APPROVED TRAFFIC CONTROL PLAN. APPROVAL SHALL BE OBTAINED PRIOR TO BEGINNING CONSTRUCTION.

N.T.S.

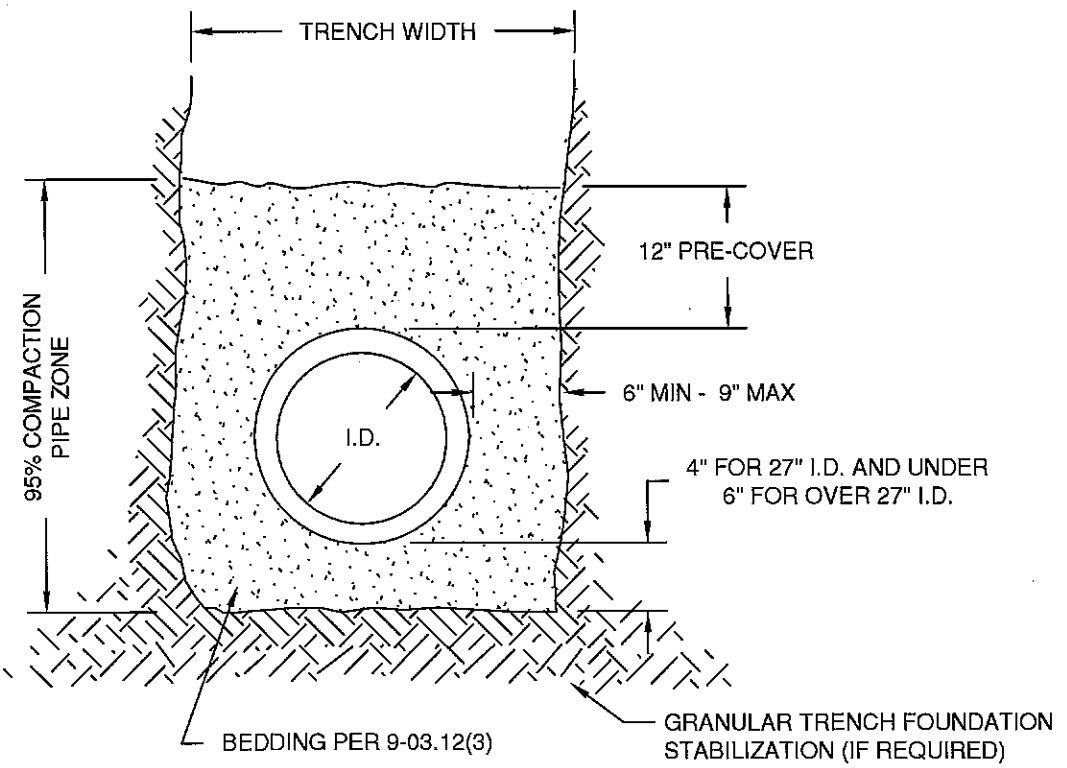

NOTES:

1. WHERE DIRECTED BY THE ENGINEER GRANULAR TRENCH FOUNDATION STABILIZATION SHALL BE PLACED PRIOR TO PLACEMENT OF THE BEDDING. SIZE AND DEPTH ARE DEPENDENT ON SOIL CONDITIONS.

2. BEDDING AND BACKFILL MATERIALS IN THE PIPE ZONE SHALL BE COMPACTED AS SPECIFIED PRIOR TO BACKFILLING THE REMAINDER OF THE TRENCH.

3. FOR ROCK AND OTHER INCOMPRESSIBLE MATERIALS, THE TRENCH SHALL BE OVER-EXCAVATED A MINIMUM OF 6" AND REFILLED WITH GRANULAR MATERIALS AS DIRECTED BY THE ENGINEER.

4. BACKFILL AND COMPACTION ABOVE THE PIPE ZONE SHALL BE AS SHOWN IN STANDARD S-04 (TRENCHING).

5. INSTALLATION SHALL CONFORM TO UNIBELL PLASTIC PIPE ASSOCIATION STANDARD SPEC. UNI-B-5 (LATEST EDITION) EXCEPT AS NOTED.

6. FINAL INSTALLATION TO BE TESTED PER SECTION 7-17.3(2)G OF THE STANDARD SPECIFICATIONS.

7. ALTERNATIVE PRE-COVER MATERIALS ARE ALLOWABLE FROM PIPE CENTERLINE TO ONE FOOT ABOVE THE TOP OF PIPE, ALTERNATE PRE-COVER MATERIALS MUST BE PRE-APPROVED BY THE INSPECTOR AND MAY BE SAND, CRUSHER SCREENINGS, GRAVEL, OR OTHER CLEAN GRANULAR MATERIAL CONTAINING NO ROCK LARGER THAN 1-1/4" IN LENGTH.

   APPROVAL FOR ALTERNATE MATERIALS WILL BE GRANTED UPON CONFIRMATION BY TEST OF ITS COMPLIANCE WITH THESE REQUIREMENTS. SUBMIT 50 LB SAMPLE FOR TESTING TO THE CITY INSPECTOR AND OBTAIN MATERIAL PRIOR TO STARTING PIPE INSTALLATION WORK. THE TEST REQUIRES A MINIMUM OF FIVE BUSINESS DAYS TO COMPLETE.

8. TRENCH WIDTH SHALL NOT EXCEED ONE AND ONE-HALF THE INSIDE DIAMETER OF THE PIPE PLUS 18" AT THE TOP OF THE PIPE ZONE. ANY SUBSIDENCE OF SURROUNDING PAVEMENT DUE TO TRENCHING SHALL BE EXCAVATED BEYOND ORIGINAL PAVEMENT OR TRENCH LIMITS AND REPAIRED TO SATISFACTION OF THE CITY OF WOODLAND.

N.T.S.

CITY OF WOODLAND	FLEXIBLE PIPE BEDDING		S-03
	CITY OF WOODLAND DEPARTMENT OF PUBLIC WORKS	APPROVED BY: EH DATE: 12/14/07	45 of 51

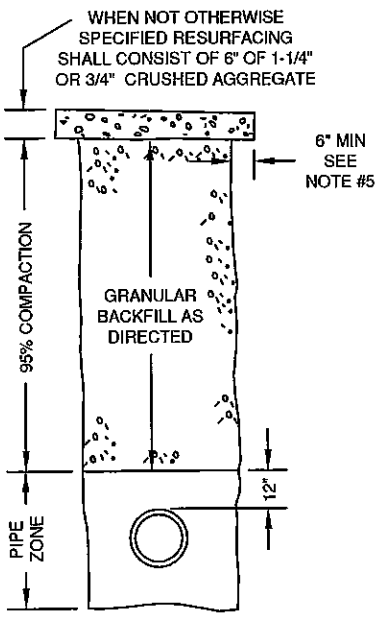

(1) TRAVELED UNIMPROVED STREET

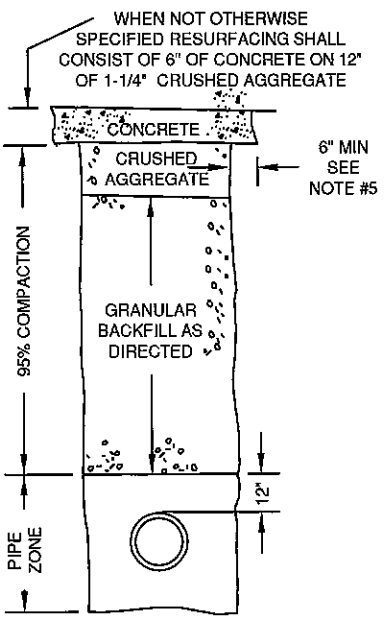

(2) HARD SURFACE (CONCRETE)

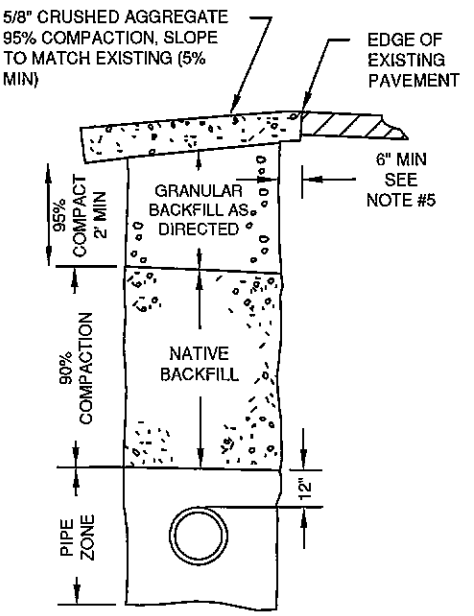

(3) ROADWAY SHOULDER

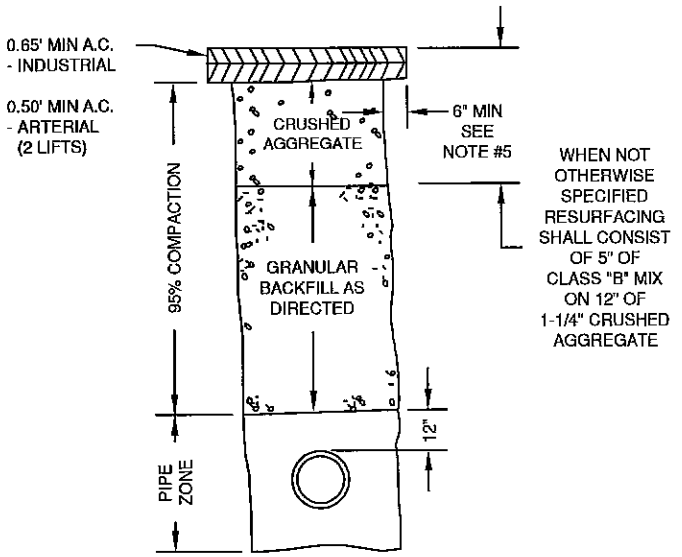

(4) MAIN OR SECONDARY ARTERIAL OIL GRAVEL OR ASPHALT CONCRETE SURFACE

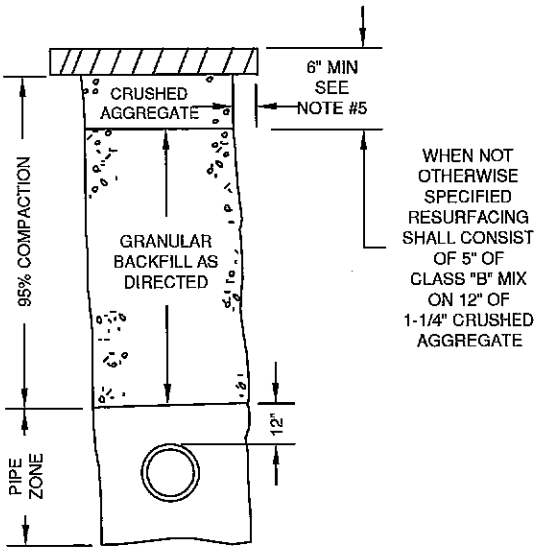

(5) COLLECTOR OR LOCAL STREET OIL GRAVEL OR ASPHALT CONCRETE SURFACE

NOTES:

1. SEE CITY OF WOODLAND RIGHT-OF-WAY PERMIT FOR ADDITIONAL TRENCH BACKFILL AND SURFACING REQUIREMENTS.
2. FOR PIPE ZONE BEDDING, BACKFILL, AND COMPACTION REQUIREMENTS, SEE STANDARD S-02 (RIGID PIPE) OR S-03 (FLEXIBLE PIPE).
3. COMPACTION PERCENTAGES REFER TO RELATIVE DRY DENSITY AS DETERMINED BY STANDARD PROCTOR (ASTM D 698).
4. CONTRACTOR MAY USE UP TO 2-1/2" OF 5/8" OR 3/4" CRUSHED AGGREGATE IN LIEU OF 1-1/4" BASE ROCK UNDER SURFACING FOR LEVELING COURSE.
5. ALL EXISTING PAVED SURFACES SHALL BE SAW CUT A MINIMUM OF 6" OUTSIDE OF EDGE OF TRENCH TO PROVIDE A NEAT STRAIGHT EDGE. THE EDGES MUST BE INSPECTED AND APPROVED BY THE CITY PRIOR TO PAVEMENT REPLACEMENT. WHERE NECESSARY THE CONTRACTOR MAY BE REQUIRED TO SAWCUT BEYOND THE EDGE OF THE ORIGINAL TRENCH TO PROVIDE A NEAT STRAIGHT EDGE.
6. THE EDGES OF ALL EXISTING ASPHALT SURFACES SHALL BE CLEANED AND A TACK COAT SHALL BE APPLIED PER STANDARD SPECIFICATION SECTION 5-04.3(5)A. ALL JOINTS SHALL BE SEALED WITH AR-4000 AND SANDED.
7. ALL BACKFILL SHALL BE MECHANICALLY COMPACTED IN LIFTS WHICH DO NOT EXCEED RATED CAPACITY OF EQUIPMENT USED, BUT IN NO CASE EXCEED 12" LOOSE.

N.T.S.

CITY OF WOODLAND	TRENCH: RESTORE, BACKFILL, BEDDING, & SURFACING		S-04
	CITY OF WOODLAND DEPARTMENT OF PUBLIC WORKS	APPROVED BY: EM DATE: 12/14/07	46 of 51

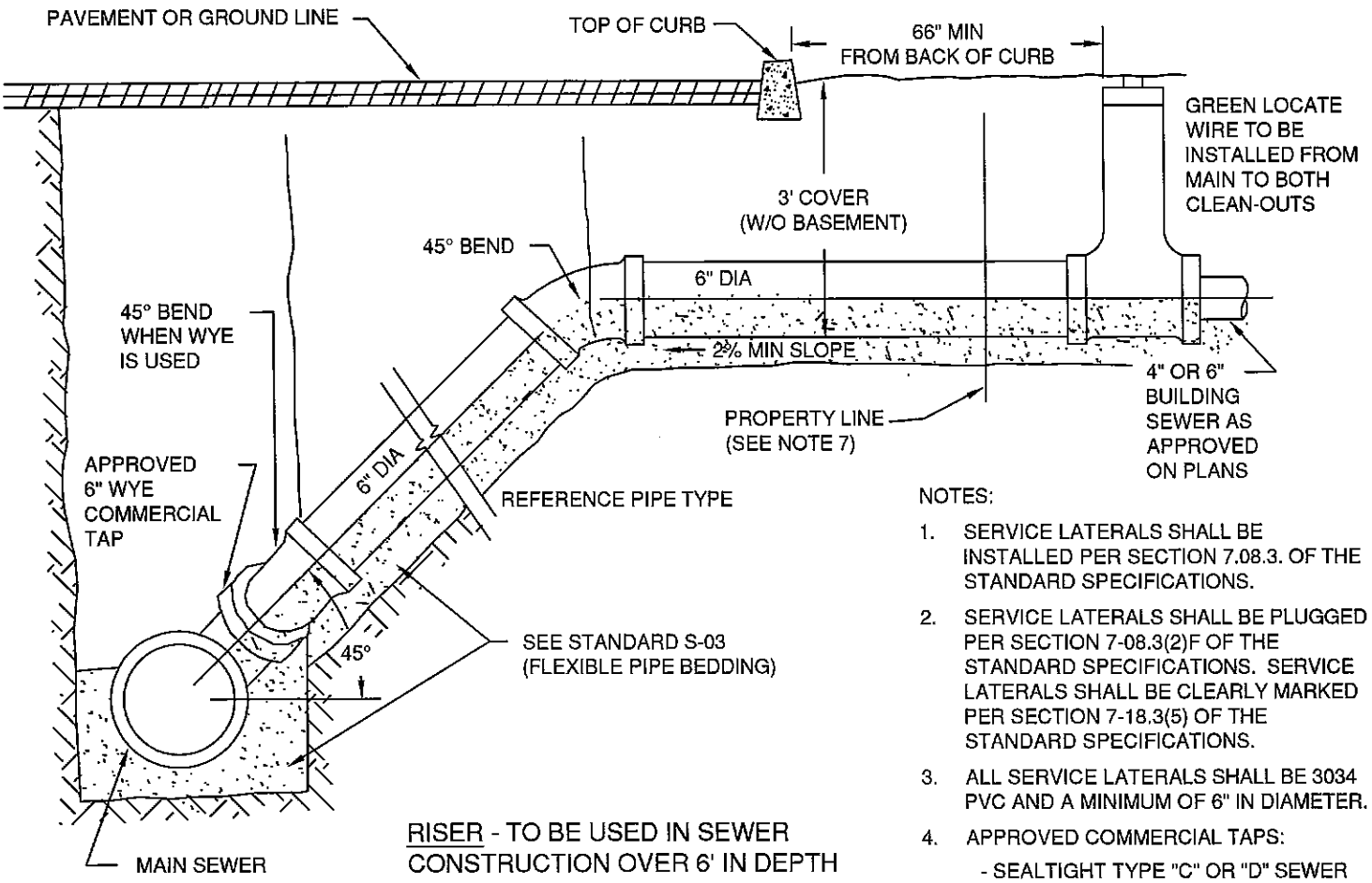

RISER - TO BE USED IN SEWER CONSTRUCTION OVER 6' IN DEPTH

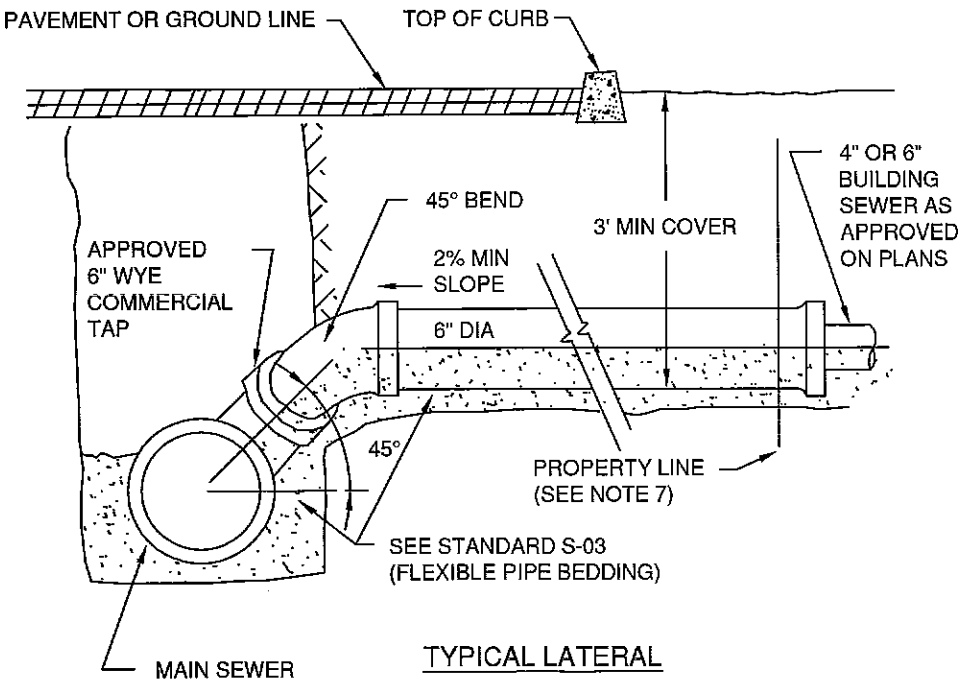

TYPICAL LATERAL

NOTES:

1. SERVICE LATERALS SHALL BE INSTALLED PER SECTION 7.08.3. OF THE STANDARD SPECIFICATIONS.
2. SERVICE LATERALS SHALL BE PLUGGED PER SECTION 7-08.3(2)F OF THE STANDARD SPECIFICATIONS. SERVICE LATERALS SHALL BE CLEARLY MARKED PER SECTION 7-18.3(5) OF THE STANDARD SPECIFICATIONS.
3. ALL SERVICE LATERALS SHALL BE 3034 PVC AND A MINIMUM OF 6" IN DIAMETER.
4. APPROVED COMMERCIAL TAPS:
   - SEALTIGHT TYPE "C" OR "D" SEWER SADDLE
   - FOWLER QUIK-WAY SEWER TAP
   - FOWLER "T & L" SEWER TEE
   - FOWLER "INSERTA TEE"
   - "TAP TITE" SEWER TEE
5. SERVICE LATERALS CONNECTING TO DUCTILE IRON PIPE SHALL ALSO BE DUCTILE IRON.
6. TRANSITIONS BETWEEN DISSIMILAR PIPE MATERIALS OR SIZES SHALL BE MADE WITH APPROVED ADAPTORS (FERNCO, CAULDER, OR APPROVED EQUIVALENT).
7. IN NEW SUBDIVISIONS AND OTHER CONSTRUCTION INVOLVING NEW ROADS, INSTALL LATERALS TO 6' BEHIND PROPERTY LINE FOR SEWERS IN STREET RIGHT-OF-WAY. INSTALL TWO WAY CLEANOUT BEHIND SIDEWALK.
8. FOLLOWING TAPPING OF MAINS FOR LATERALS, CONTRACTOR SHALL TV THE MAIN TO VERIFY THAT THE TAP WAS PROPERLY MADE AND IS NOT PROTRUDING INTO THE PIPE. A VIDEO TAPE OR DVD/CD OF THE TAP SHALL BE SUBMITTED TO THE CITY FOR APPROVAL OF THE TAP.

N.T.S.

CITY OF WOODLAND	SERVICE LATERAL CONNECTIONS		S-05
	CITY OF WOODLAND DEPARTMENT OF PUBLIC WORKS	APPROVED BY: EM DATE: 12/14/07	47 of 51

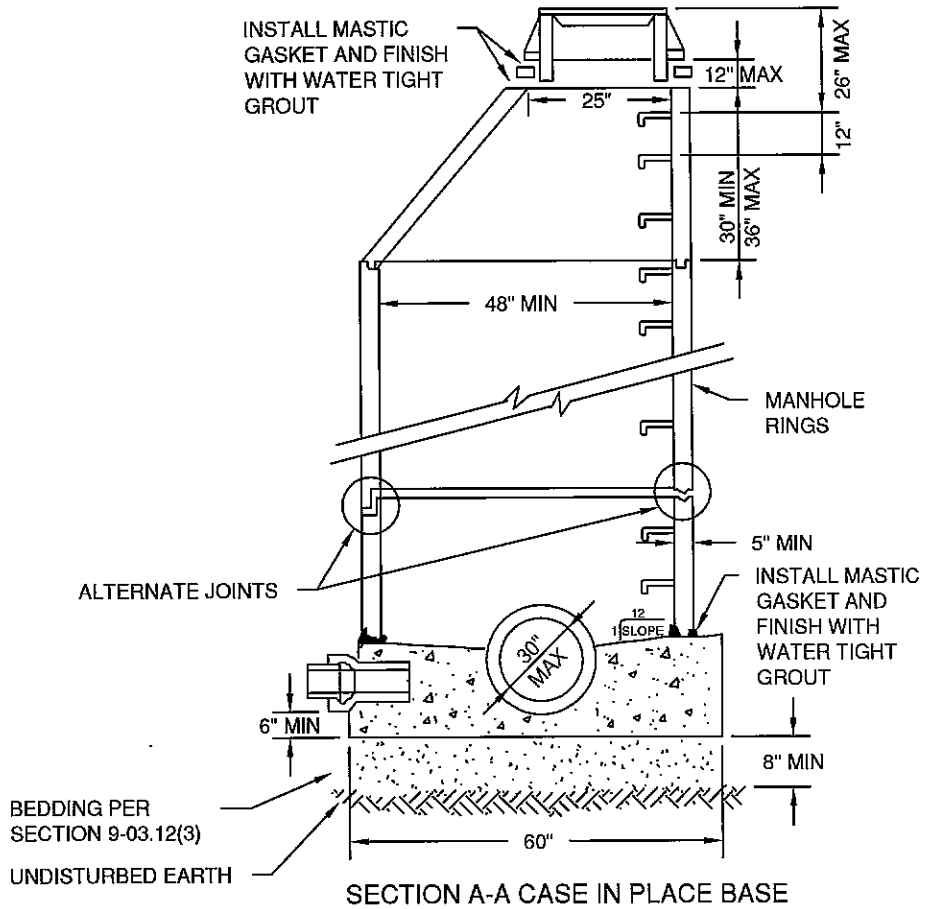

SECTION A-A CASE IN PLACE BASE

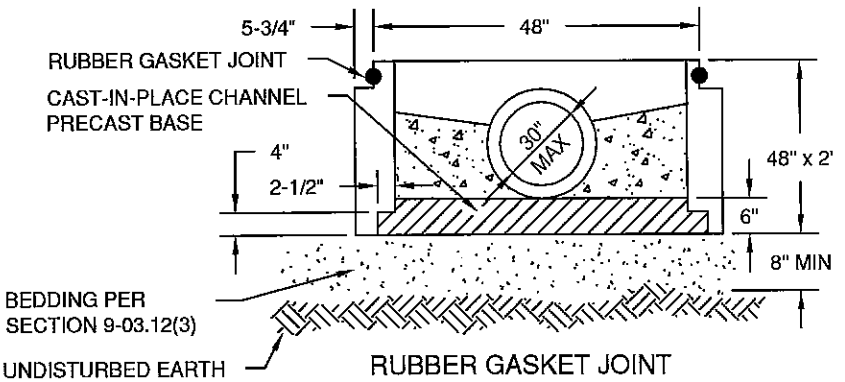

RUBBER GASKET JOINT

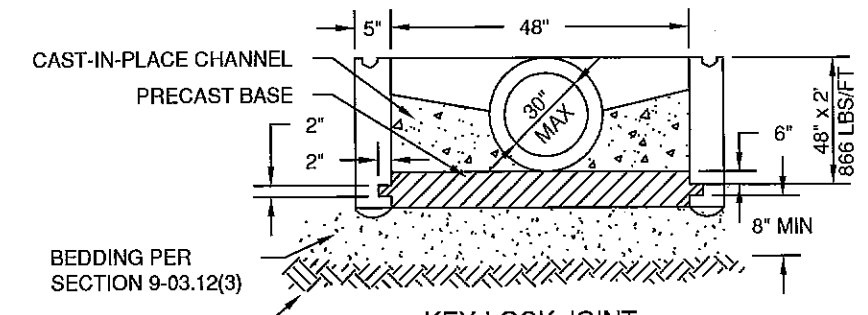

KEY-LOCK JOINT
PRECAST MANHOLE BASE (ALTERNATE)

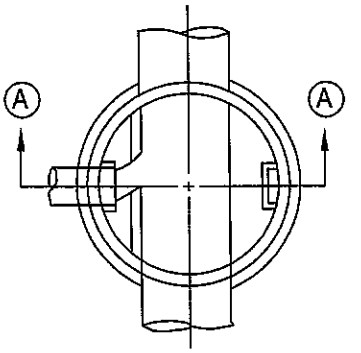

PLAN

NOTES:

1. ALL PRECAST MANHOLES RINGS AND CONES SHALL CONFORM TO ASTM C-478 WITH CAST IN STEPS, SEE STANDARD S-10 (MANHOLE STEP).
2. IN OVER EXCAVATED AREAS, PROVIDE SUPPORT FOR THE PIPE AS FOLLOWS: PLACE 3/4" MINUS CRUSHED ROCK OVER UNDISTURBED GROUND IN 6" LAYERS AND COMPACT USING HAND TAMPER.
3. BASE CONCRETE SHALL BE 3,000 PSI, 2-4" SLUMP. FLOW LINES AND INSIDE SURFACES SHALL BE TROWELED SMOOTH & UNIFORM AT TIME OF POUR. MANHOLE BASE MAY BE MONOLITHICALLY CAST TO 8" ABOVE BARREL OF MAIN SEWER. CHANNELS SHALL CONFORM ACCURATELY TO SEWER GRADE. INSTALL BENCHES TO ELEVATION OF SPRINGLINE OF PIPE.
4. CAST-IN-PLACE, MONOLITHIC MANHOLE MAY BE SUBSTITUTED WITH SPECIFIC APPROVAL OF THE ENGINEER. SEE STANDARD S-11 (MANHOLE CONNECTION).
5. JOINTS SHALL BE CONSTRUCTED SO AS TO BE WATERTIGHT. SEE STANDARD S-12 (TOP SLAB FOR PRECAST MANHOLE) AND S-15 (MANHOLE JOINTS).
6. SEAL ALL MANHOLE JOINTS AND FRAME WITH INFI-SHIELD "SEAL WRAP" EXTERIOR SEAL SYSTEM OR APPROVED EQUIVALENT.
7. MANHOLES UNDER 6' IN DEPTH FROM RIM TO SHELF SHALL HAVE A TOP SLAB IN LIEU OF CONE. SEE STANDARD S-12 (TOP SLAB FOR PRECAST MANHOLE).
8. VACUUM TESTING OF MANHOLES WILL BE REQUIRED.
9. LOCKING COVERS ARE REQUIRED IN EASEMENTS OR AT THE DISCRETION OF THE CITY INSPECTOR.

N.T.S.

CITY OF WOODLAND	STANDARD PRECAST MANHOLE		S-08
	CITY OF WOODLAND DEPARTMENT OF PUBLIC WORKS	APPROVED BY: MLP DATE: 12/13/07	48 of 51

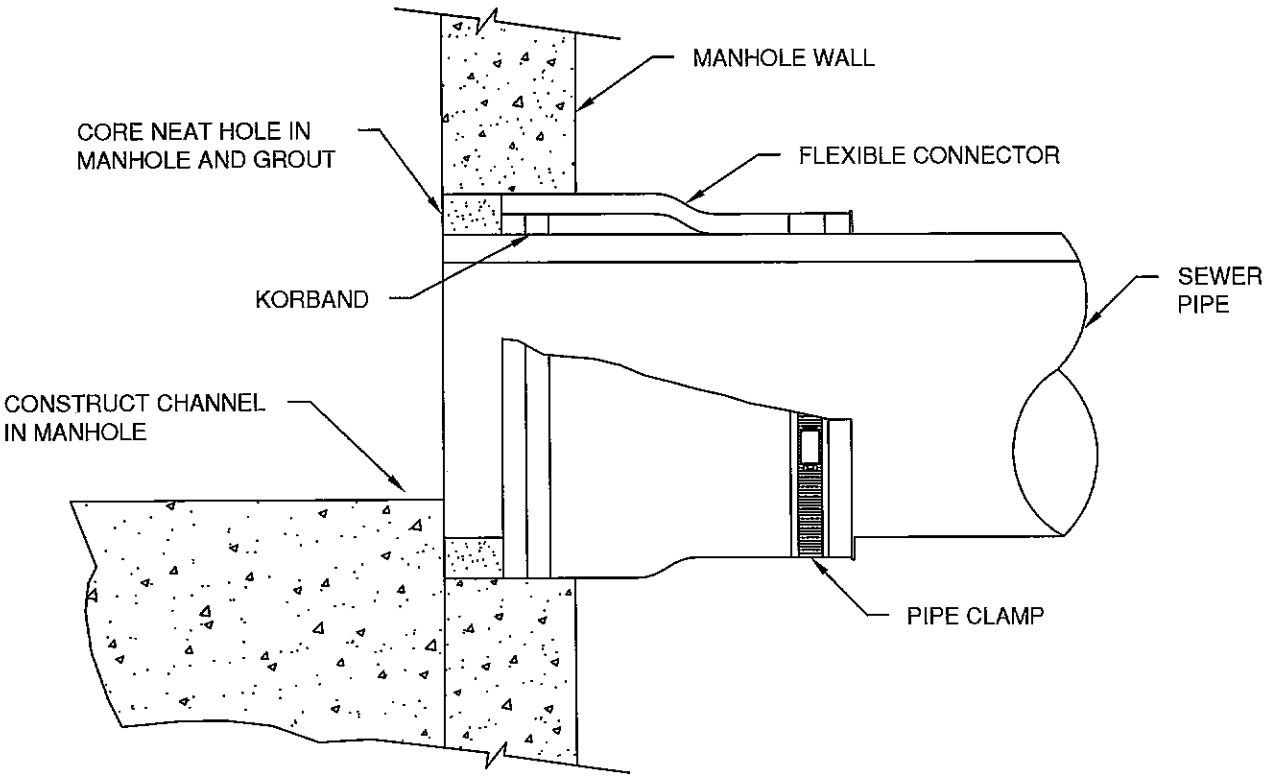

NOTES:

1. CONNECTIONS TO MANHOLE SHALL BE MADE WITH AN APPROVED EXPANSION TYPE RUBBER BOOT; KOR-N-SEAL OR SEALTITE, (NO FLEX JOINT REQUIRED), FOR ALL PIPES UP TO 18". LARGER PIPES WILL BE HANDLED ON A CASE-BY-CASE BASIS.

2. CORE NEAT HOLE IN MANHOLE AND INSTALL BOOT AS REQUIRED PER MANUFACTURER'S SPECIFICATIONS.

3. STUB-OUTS INSTALLED FOR FUTURE EXTENSIONS ARE TO BE PLUGGED AT BOTH ENDS.

N.T.S.

CITY OF WOODLAND	MANHOLE CONNECTION		S-11
	CITY OF WOODLAND DEPARTMENT OF PUBLIC WORKS	APPROVED BY: MLP DATE: 12/13/07	49 of 51

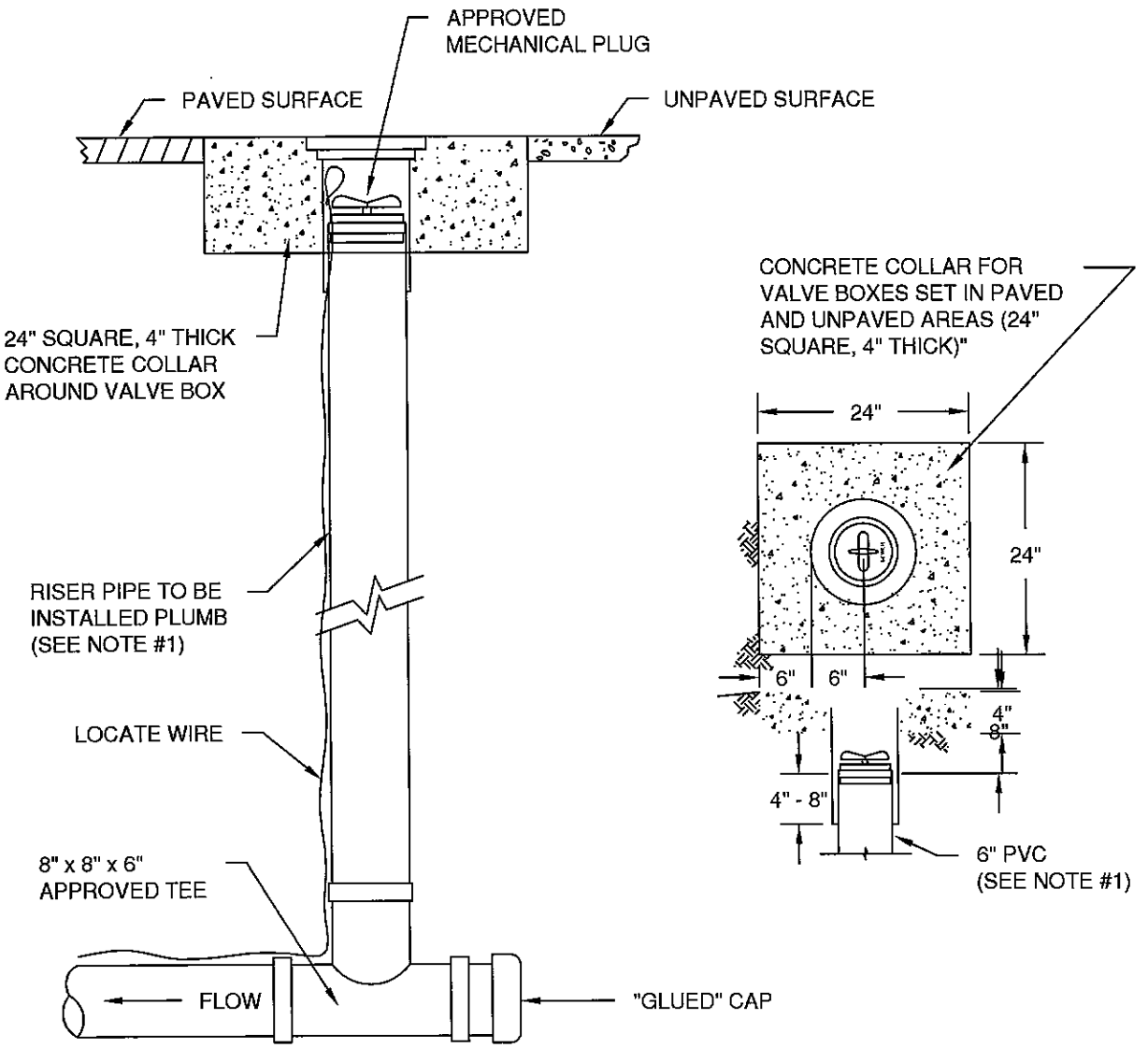

NOTES:

1. RISER PIPE SHALL BE 6" ASTM D 3034 SDR 35 PVC PIPE.
2. VALVE BOX SHALL BE "RICH 910" CAST IRON, SEE STANDARD S-17 (SEWER CLEAN-OUT) OR APPROVED EQUIVALENT.
3. THERE SHALL BE 1/2" CLEARANCE UNDER THE PIN CAST INTO THE LID.
4. CONCRETE COLLAR SHALL BE A MINIMUM STRENGTH OF 3,000 PSI.
5. PIPE BEDDING SHALL CONFORM TO STANDARD S-02 (RIGID PIPE BEDDING).
6. INSTALL AT EVERY SANITARY SEWER MAIN. TERMINATION OUTSIDE THE RIGHT-OF-WAY.

N.T.S.

CITY OF WOODLAND	SANITARY STUB MARKER		S-16
	CITY OF WOODLAND DEPARTMENT OF PUBLIC WORKS	APPROVED BY: EM DATE: 12/4/07	50 of 51

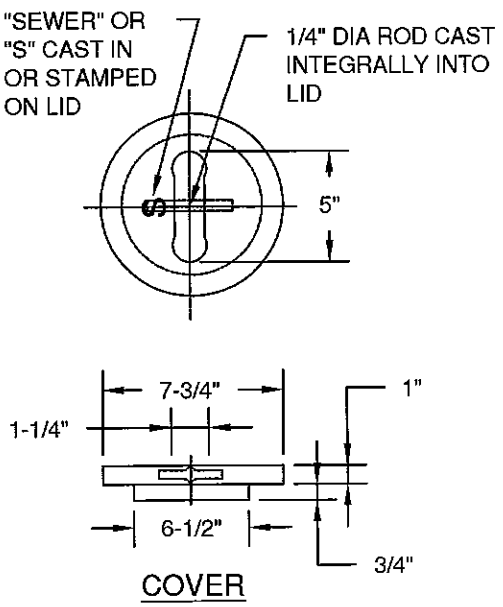

COVER

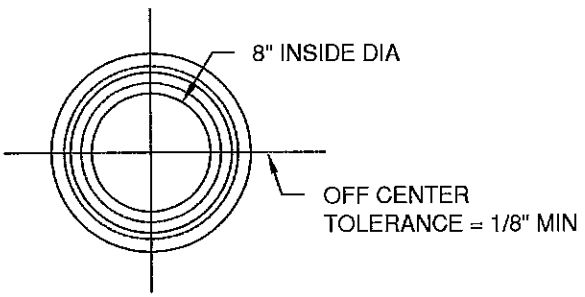

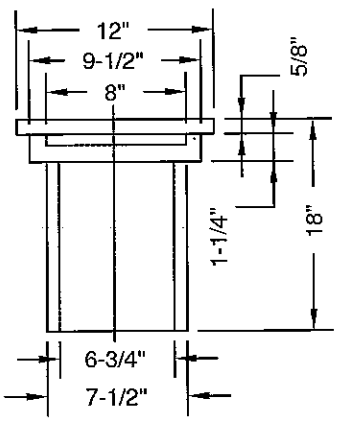

CAST IRON VALVE BOX
RICH NO. 910

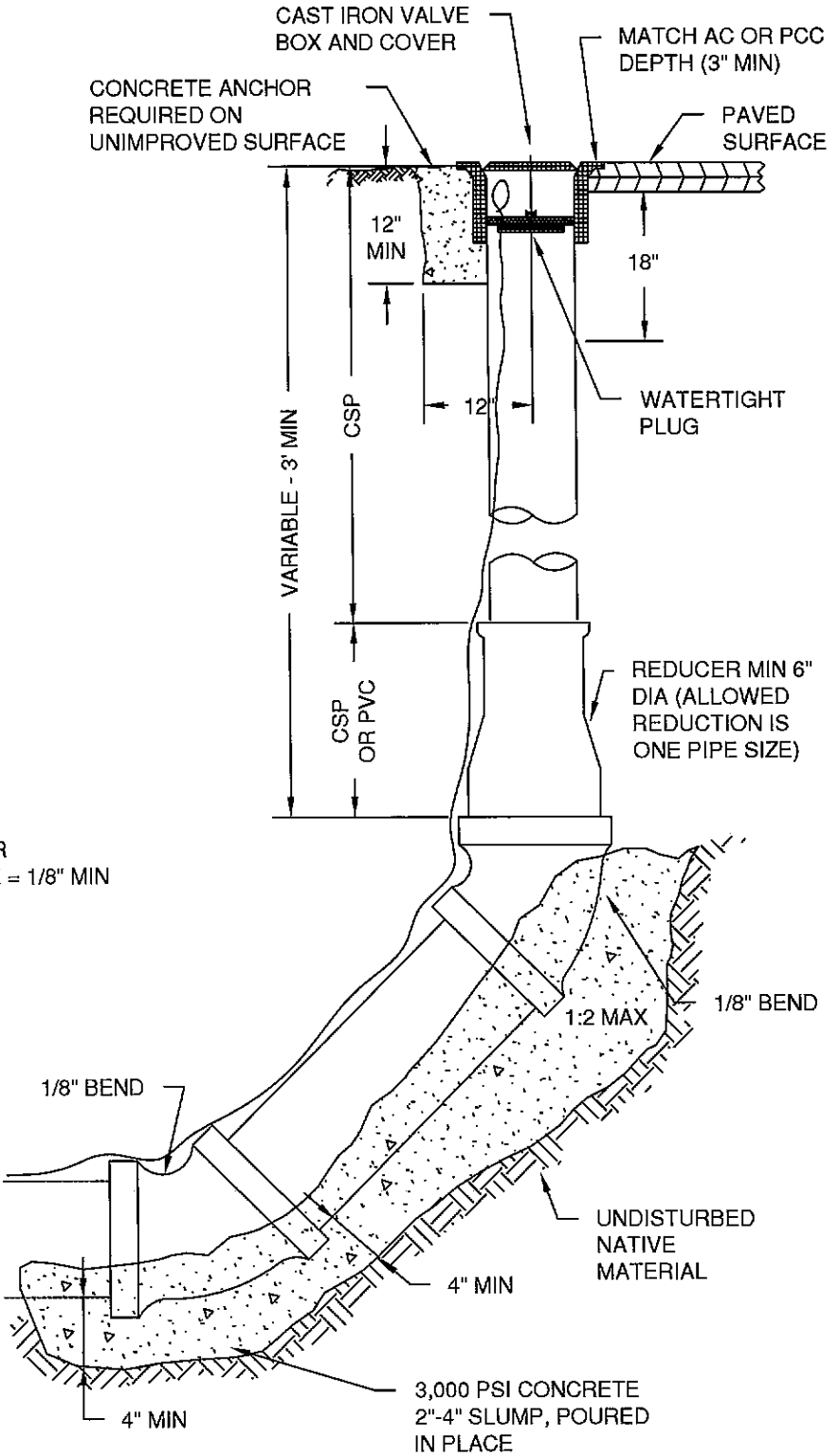

SEWER CLEANOUT

N.T.S.

CITY OF WOODLAND	SEWER CLEANOUT		S-17
	CITY OF WOODLAND DEPARTMENT OF PUBLIC WORKS	APPROVED BY: EM DATE: 12/19/07	51 of 51